Door Configuration	Maximum Design Pressure, PSF		Maximum Door Opening Size, in.		Maximum Exposed Glazing Size (DLO)*, in.		Locking Hardware Description				Comments
	Positive	Negative	Width	Height	Width	Height	Hardware Family	Model/Series	Strike Models	Brand	
1	60	60	72	84	24	64	Rim Exit Device	98, 99, 98-F, 99-F	499F	Von Duprin	for pairs use Von Duprin Hardware Mullion See Sheet 8
								XP98, XP99, XP98-F, XP99-F	909/954		
								88-F	468		
								HH78, HH78-F	499F		
2	50	50	96	96	34.25	74.5	Rim Exit Device	98, 99, 98-F, 99-F	499F	Von Duprin	for pairs use Von Duprin Hardware Mullion See Sheet 8
								XP98, XP99, XP98-F, XP99-F	909/954		
								88-F	468		
								HH78, HH78-F	499F		
3A	90 SEE NOTE 2.	90 SEE NOTE 2.	96	96	12	12	Rim Exit Device	XP98, XP99, XP98-F, XP99-F	909/954	Von Duprin	for pairs use Von Duprin HH9954 Hardware Mullion by See Sheet 8
3B					3 4 5	33 25 20					
3AA	70	70	96	96	12	12					for pairs use Von Duprin 9964 & KR9964 Hardware Mullion by See Sheet 8
3BB					3 4 5	33 25 20					
4A	60	60	72	84	24	64	Surface Vertical Rod Exit Device	98/9927 & 98/9927-F	299F-499F Top, 304L Bottom	Von Duprin	
								HH7827, HH7827-F	299F-499F Top, 304L Bottom		
								F-25-V & 25-V	3788 Top, 2130 Bottom	Falcon	
4B	70	70	92	84	6	30	Surface Vertical Rod Exit Device	98/9927 & 98/9927-F	499F Top, 304L Bottom	Von Duprin	
								HH7827, HH7827-F	499F Top, 304L Bottom		
5	60	60	72	84	24	64	Concealed Vertical Rod Exit Device	9847-F, 9947-F, HH9847, HH9947	338 Top, 304L Bottom	Von Duprin	HH98/9947 device has a 2-3/4" backset
								3347A-F, 3547A-F, HH3347A, HH3547A	338 Top, 304L Bottom		HH33/3547A device has a 2-3/4" backset
								HH7847, HH7847-F	338 Top, 304L Bottom		HH7847 Device has a 2-3/4" backset
								HH7547, HH7547-F	338 Top, 304L Bottom		HH7547 Device has a 2-3/4" backset
								F-25-C	4188 Top, 2130 Bottom	Falcon	
6	60	60	72	84	24	64	Three-Point Latching Device	9857, 9957, 9857-F, 9957-F	299F/499F Top, 499F Middle, 304L Bottom	Von Duprin	for pairs use Von Duprin Hardware Mullion See Sheet 8
7	60	60	36	84	24	64	Three-Point Latching Device	9857, 9957, 9857-F, 9957-F	299F/499F Top, 299F/499F Middle, 304L Bottom	Von Duprin	NOTE 3
8	50	50	96	96	34.25	74.5	Three-Point Latching Device	9857, 9957, 9857-F, 9957-F	299F/499F Top, 499F Middle, 304L Bottom	Von Duprin	for pairs use Von Duprin Hardware Mullion See Sheet 8
9	50	50	48	96	34.25	74.5	Three-Point Latching Device	9857, 9957, 9857-F, 9957-F	299F/499F Top, 299F/499F Middle, 304L Bottom	Von Duprin	NOTE 3
10	50	50	96	96	34.25	74.5	Mortise Lock	L/LV9000, AD-MS, CO-MS, PM	10-072	Schlage	Function w/o deadbolt, 3/4" min. throw latch
								LE-MS, LEB-MS, LE-MB, LEB-MB	10-072	Schlage	
								XE360-M-B & XE360-M-I	10-072	Schlage	
								L/LV9400, AD-MD, CO-MD, PM400	10-072	Schlage	Function with deadbolt, 3/4" min. throw latch & 1" min. throw bolt
								LE-MD, LEB-MD	10-072	Schlage	
								XE360-M-D	10-072	Schlage	
								MA	ANSI	Falcon	Function with or without deadbolt, 3/4" min. throw latch & 1" min. throw bolt (if applicable)
11	50	50	96	96	34.25	74.5	Cylindrical Lock	D, ND, NDE, NDEB, AD-CY, CO-CY	10-025	Schlage	1/2" min. throw latch
								ALX, PC	ANSI	Schlage	1/2" min. throw latch (13-247, 14-028)
								T & TM	ANSI	Falcon	1/2" throw latch (23981145)

TABLE 1.

NOTES:
1. SEE SHEETS 9, 10, 11 & 12 FOR LOCKING HARDWARE. FOR DOOR CONFIGURATIONS 7, 8, 9 & 10 INACTIVE LEAF REQUIRES IVES SB360 SURFACE BOLT TOP AND BOTTOM, EACH ATTACHED WITH (4) #12-24 OVAL HEAD MACHINE SCREWS AND SEX BOLTS.
2. DOOR CONFIGURATIONS 3A & 3B ARE RATED FOR MAXIMUM DESIGN PRESSURE UP TO +75 PSF WHEN WATER INFILTRATION REQUIREMENT IS NEEDED, AND ±90 PSF WHEN WATER INFILTRATION REQUIREMENT IS NOT NEEDED.
3. DOOR CONFIGURATIONS 7 & 9 ARE FOR USE ON TWO DOORS WITH FIXED HOLLOW METAL MULLION.
4. DOOR CONSTRUCTION UNDER SEPARATE APPROVAL.
5. ALL FINISHES, 3' AND 4' DOOR WIDTH MODELS OFFERED.
6. ELECTRIFIED AND FIRE RATED OPTIONS OF APPROVED HARDWARE ARE ACCEPTABLE . INSTALLATION AND APPLICATION IS UNDER SEPARATE APPROVAL AND IS REVIEWED BY THE CORRESPONDING AUTHORITY.
7. THIS COMPONENT DEVICE IS APPROVED AS AN EQUAL ALTERNATE FOR DOUBLE 16 GA. STEEL OUTSWING COMMERCIAL DOORS HOLDING CURRENT NOA OR HVHZ COMPLIANT FBC APPROVAL. NOMINAL DOOR THICKNESS 1 3/4". THE DESIGN PRESSURE RATING OF THE ASSEMBLY SHALL BE EQUAL TO THAT OF THE LOWEST RATED COMPONENT, EITHER THE HARDWARE OR THE DOOR.
8. THE HARDWARE SHOULD BE INSTALLED IN COMMERCIAL STEEL DOOR NO WIDER THAN 48" AND NO HIGHER THAN 96".
9. OPTIONAL SIGNAL SWITCH AND POWER TRANSFER UNITS MAY BE USED AS ALLOWED BY CODE AND IF IT DOESN'T AFFECT THE MECHANICAL PROPERTIES OF THE HARDWARE AND/OR INHIBIT EGRESS. TO BE REVIEWED BY BUILDING OFFICIAL.
10 .THIS HARDWARE CAN BE INSTALLED AS PART OF LARGE MISSILE IMPACT RESISTANT UNIT. 50F/S
11. FIRE RATING IS NOT PART OF THIS APPROVAL, CONSULT MANUFACTURER FOR APPROVED CONFIGURATIONS.

REVISIONS

LTR	DESCRIPTION	ENG	DATE
A	APPROVAL DWG	YMF	05/20/07
M	REVISED DWG	JPD	07/18/18
N	LOCK UPDATE	SM	11/27/19
O	LOCK UPDATE	ER	10/05/20
P	LOCK UPDATE	CA	05/19/22
Q	CODE UPDATE	DI	08/25/23
R	LOCK UPDATE	JA	10/14/24
S	MULLION UPDATE	DI	12/02/25

DETAIL 'C' MEETING DOOR EDGES

DOOR CONFIGURATIONS: 10, 11
Z-ASTRAGAL ON
INACTIVE LEAF

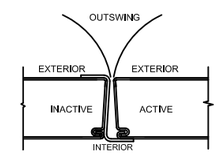

DOOR CONFIGURATIONS: 1, 2, 3A, 3B, 3AA, 3BB, 6, 8
VON DUPRIN HARDWARE MULLION

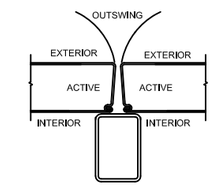

REMOVABLE HARDWARE MULLION
SEE SHEET 8

DOOR CONFIGURATIONS: 4 & 5
NO ASTRAGAL / NO MULLION
BOTH DOORS ACTIVE

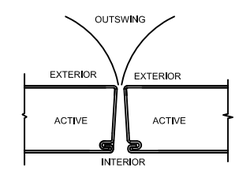

DOOR CONFIGURATION: 7 & 9
FIXED HOLLOW METAL MULLION

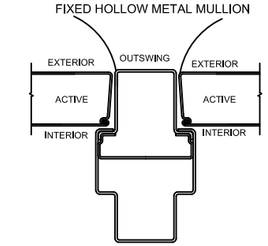

FIXED HOLLOW METAL MULLION

Digitally signed by Hermes F. Norero, P.E.
Reason: I am approving this document
Date: 2025.12.11 14:31:22 -05'00'

HERMES F. NORERO LICENSE No. 73778 STATE OF FLORIDA PROFESSIONAL ENGINEER
HERMES F. NORERO, P.E.
FLORIDA P.E. No. 73778
BUILDING TECHNOLOGIES, INC.
10 SE 1ST AVENUE, MIAMI, FL 33131
FBPE CERT. OF AUTHORIZATION No. 29578

COMPLIANCE STATEMENT:
THESE PRODUCTS HAVE BEEN TESTED TO HVHZ PROTOCOLS TAS 201, TAS 202 & TAS 203-94, ASTM PROTOCOLS E283-04(12), E330-14 AND E331-00(09), AND COMPLY WITH THE CURRENT EDITION OF THE FLORIDA BUILDING CODE

BEND RADIUS

THIRD ANGLE PROJECTION

DRAWN YMF	DATE 05/20/07
CHECKED	
APPROVED	
ENG. APPVL JPD	11/15/07

ALLEGION-SCHLAGE LOCK COMPANY, LLC
11819 N. PENNSYLVANIA STREET
CARMEL, IN 46032

TITLE: HARDWARE FOR DOUBLE OUTSWING GLAZED COMMERCAL STEEL DOORS

GLASS OUTSWING DOORS AND HARDWARE CONFIGURATIONS
COMMERCIAL DOOR OPENING DOUBLE GLASS DOORS.

SIZE	FLAT	DWG NO.	REV
		IRGD07C	S

SCALE:	AUTOCAD	FL14482.4	SHEET 1 OF 11
NTS			

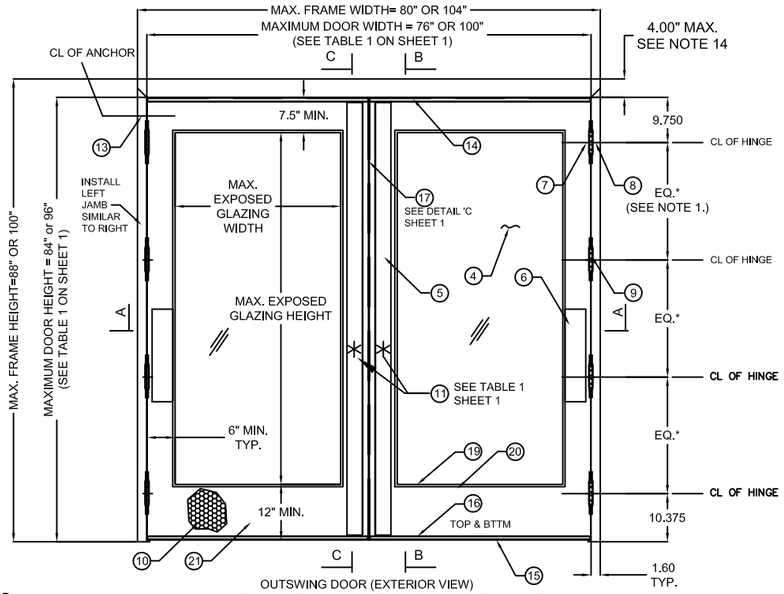

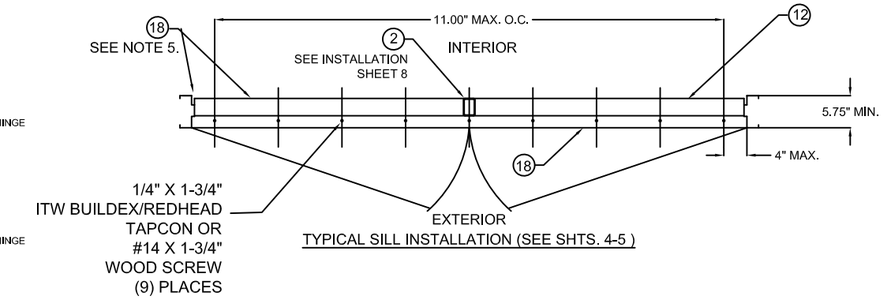

TYPICAL SILL INSTALLATION (SEE SHTS. 4-5)

REVISIONS

LTR	DESCRIPTION	ENG	DATE
A	APPROVAL DWG	YMF	05/20/07
M	REVISED DWG	JPD	07/18/18
N	LOCK UPDATE	SM	11/27/19
O	LOCK UPDATE	ER	10/05/20
P	LOCK UPDATE	CA	05/19/22
Q	CODE UPDATE	DI	08/25/23
R	LOCK UPDATE	JA	10/14/24
S	MULLION UPDATE	DI	12/02/25

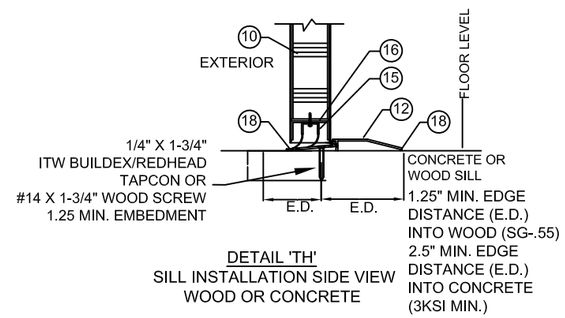

DETAIL 'TH'
SILL INSTALLATION SIDE VIEW
WOOD OR CONCRETE

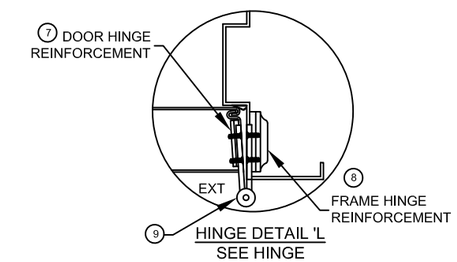

HINGE DETAIL 'L'
SEE HINGE
OPTIONS SHEET 15

TABLE 2

	QUANTITY	DESCRIPTION	MATERIAL	SIZE
2	1	A) VON DUPRIN HH9954 HARDWARE MULLION	.312" A500 STL	MAX. 96" HEIGHT
		B) VON DUPRIN 9964 OR KR9964 HARDWARE MULLION	.118" A500 STL	MAX. 96" HEIGHT
4	2	LEXAN BY SABIC INNOVATIVE PLASTICS	.25" OR .50"	35.406" X 75.656" MAX.
		LAMINATED GLASS WITH KURARAY SENTRYGLAS INTERLAYER	.562" TYP.	
		SUPERLITE II-XL BY SAFTI W/ KURARAY SENTRYGLAS INTERLAYER	1.06" TYP.	
5	2	LOCK SIDE REINFORCEMENT CHANNEL	.093" MIN. STL	3.5" X 93.44" MAX.
6	2	HINGE SIDE PANIC REINFORCEMENT	.067" MIN. STL	MAX. 20"
7	NOTE 1	HINGE REINFORCEMENT DOOR ASTM A621	.167" MIN. STL	1.23" X 9.19" MIN.
8	NOTE 1	HINGE REINFORCEMENT FRAME ASTM A621	.167" MIN. STL	1.5" X 9.19" MIN.
9	NOTE 1	4.5" X 4.5" BUTT HINGES (SEE SHT. 10)	.134" MIN.	(8) #12-24 MS PER HINGE
		OPTIONAL CONTINUOUS HINGE (SEE SHT. 10)	.75" MIN. STL / .12" ALUM	MAX. 95"
11	2	LOCKING HARDWARE - SEE TABLE 1, SHT. 1		
12	1	THRESHOLD SILL W/ BUMPER GASKET (SEE SHTS. 3, 4 & 5)		5" X .5" X 96" MAX.
		12A) 566 ZERO WATER RATED SHTS. 3 & 4 NON WATER SHT. 5	.125" ALUM. 6063-T5	
		12B) 65 ZERO NON WATER RATED SHT. 5	.125" ALUM. 6063-T5	
		12C) 568 ZERO NON WATER RATED SHT. 5	.125" ALUM. 6063-T5	6" X .5" X 96" MAX.
14	SEE SHTS. 3, 4 & 5	14A) PS074 DOOR SEAL STEELCRAFT	TPE	VARIES
		14B) 188S DOOR SEAL ZERO	SILICONE	
		14C) 117S DOOR SEAL ZERO		
		14D) 8144S DOOR SEAL ZERO		
		14E) 8150S DOOR SEAL ZERO		
		14F) 8145S DOOR SEAL ZERO		
15	2	FAS-SEAL DOOR SWEEP SEE SHTS. 3, 4 & 5	TPE	47.66" MAX,
16	4	END CHANNEL ASTM A924 (14 GA - INVERTED)		.69" X 1.66" X 48" MAX.
17	1	17A) 328 SPLIT ASTRAGAL BY ZERO INT'L	SEE SHTS. 3 & 5	
18	AS NEEDED	CAULK - BUTYL RUBBER OR SILICONE	SEE SHTS. 3, 4 & 5	
19	AS NEEDED	GLAZING HOLDING TRIM SEE SHT. 6	SEE SHT. 6	34.25" X 74.5" EXPOSED GLASS MAX. SEE SHT. 6 FOR DETAILS AND LIMITATIONS
		#1) DEZIGNER TRIM	.035" MIN. STL	
		#2) STEEL OVERLAPPING TRIM		
		#3) STEEL OVERLAPPING TRIM		
20	NOTE 9	CUTOUT REINFORCEMENT CHANNEL (18 GA)	.047" MIN. STL	.5" X 1.66" X 35.5"/75.5" MAX.
22	VARIES	22A) 8150S DOOR SEAL BY ZERO INT'L SEE SHTS. 3 & 5	TPE	24" MAX.
		22B) 188S DOOR SEAL BY ZERO INT'L SEE SHTS. 4 & 5		
24	2	24A) 139 DOOR SWEEP BY ZERO INT'L	SEE SHTS. 3, 4 & 5	96" MAX. FOR VERTICAL 48" MAX. FOR HORIZONTAL
		24B) 328 DOOR SWEEP BY ZERO INT'L		
		24C) 39 DOOR SWEEP BY ZERO INT'L		
25	2	25A) 475 ADJUSTABLE SEAL BY ZERO INT'L SEE SHT. 4	TPE	48" MAX.
26	1	26A) 142 RAIN DRIP BY ZERO INT'L	SEE SHTS. 4 & 5	104" MAX.
	2	26B) 11 RAIN DRIP BY ZERO INT'L		48" MAX.
27	2	TOP CAP GALV. A60 ASTM A924	.020" MIN. STL	.5" X 1.76" X 48" MAX.
28	1	HOLLOW METAL MULLION	STL	96" MAX.
29	2	IVES 360 SURFACE BOLT - TOP & BOTTOM INACTIVE LEAF CONFIG. 10 & 11	STL	12" MIN. - 24" MAX. LENGTH

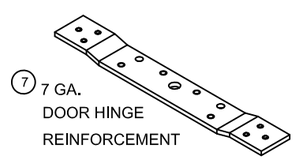

(7) 7 GA.
DOOR HINGE
REINFORCEMENT

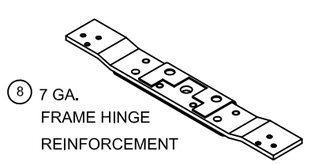

(8) 7 GA.
FRAME HINGE
REINFORCEMENT

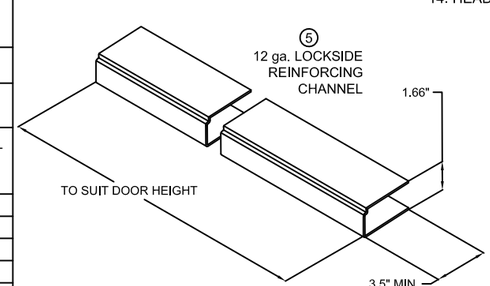

NOTES:
1. HINGE REQUIREMENTS: 4.5" STD WT. MIN.
   FOR DOOR OPENING UP TO 90" HIGH - MIN (3) HINGES
   FOR DOOR OPENING OVER 90" - 96" HIGH - MIN (4) HINGES
   STD LOCATIONS: 9.75" FROM RABBET IN HEAD TO CL OF TOP HINGE
   10.38" FROM FLOOR TO CL OF BOTTOM HINGE, EQUALLY
   SPACED IN BETWEEN. HINGE LOCATIONS MAY VARY, MAX SPACING
   NOT TO EXCEED 35.5" FOR THREE HINGES
2. SEE SHEET 11 FOR APPROVED CONTINUOUS AND BUTT HINGE MODELS
3. SEE SHEETS 1 & 2 FOR AVAILABLE STANDARD OPENING SIZES AND SPECIFICATIONS.
4. HARDWARE INSTALLATION AS PER MANUFACTURER'S INSTRUCTIONS.
5. APPLY CAULK TO FULL LENGTH OF SILL AND ENTIRE PERIMETER OF FRAME SEE SHEETS 3-5.
6. WEATERSTRIPPING
   -WHEN WATER INFILTRATION IS REQUIRED INSTALL PER SHEETS 3 AND 4 AS APPLICABLE
   -WHEN WATER INFILTRATION IS NOT REQUIRED INSTALL PER SHEET 5 AS APPLICABLE
7. INSTALL REINFORCEMENT CHANNELS (ITEM #20) AROUND EACH LITE-CUTOUT.
8. ELECTRIFIED AND FIRE RATED OPTIONS OF APPROVED HARDWARE ARE ACCEPTABLE. INSTALLATION AND APPLICATION IS UNDER SEPARATE APPROVAL AND IS REVIEWED BY THE CORRESPONDING AUTHORITY. FIRE RATING NOT PART OF THIS APPROVAL, CONSULT MANUFACTURER FOR APPROVED CONFIGURATIONS.
9. OPTIONAL POWER TRANSFERS, AND/OR "SIGNAL SWITCH" MAY BE USED AS ALLOWED BY CODE AND IT DOES NOT EFFECT THE MECHANICAL PROPERTIES OF HARDWARE AND/OR INHIBIT EGRESS.
10. SILL SHALL BE ANCHORED PER INSTALLATION DETAIL ON THIS SHEET AND SHEETS 3-5.
13. GASKETING QUANTITY WILL INCREASE WHEN USED WITH HOLLOW METAL MULLION. SEE SHTS 3-5 FOR DETAILS.
14. HEAD SECTION CAN HAVE 4" FACE DIMENSIONS WHEN IT'S GROUTED WITH CONCRETE.

HERMES F. NORERO
LICENSE
No. 73778
STATE OF
HERMES F. NORERO, P.E.
FLORIDA REG. NO. 73778
SULLO & ASSOCIATES, INC.
10 SOUTH MAIN ST. STE. 1-B
FBPE CERT. OF AUTHORIZATION No. 29578
PROFESSIONAL ENGINEER

BEND RADIUS

THIRD ANGLE PROJECTION

DRAWN YMF	DATE 05/20/07
CHECKED	
APPROVED	
ENG. APPVL JPD	11/15/07

ALLEGION-SCHLAGE LOCK COMPANY, LLC
11819 N. PENNSYLVANIA STREET
CARMEL, IN 46032

TITLE: HARDWARE FOR DOUBLE OUTSWING GLAZED COMMERCIAL STEEL DOORS

H-SERIES GLASS DOUBLE DOORS OUTSWING CONFIGURATIONS

SIZE	FLAT	DWG NO.	REV
		IRGD07C	S

SCALE:	NTS	AUTOCAD	FL14482.4	SHEET 2 OF 11

TABLE 3.1 WATER RATED PERIMETER SEAL HARDWARE - ZERO INT'L THRESHOLD 566

ITEM NUMBER	MODEL No./ DESCRIPTION	MFG.
12A	566 THRESHOLD	ZERO INT'L
15	FAS-SEAL SWEEP	STEELCRAFT
16	END CHANNEL	STEELCRAFT
17A	328 SPLIT ASTRAGAL	ZERO INT'L
22A	8150S DOOR SEAL	ZERO INT'L
24A	139 DOOR SWEEP	ZERO INT'L
26A	142 RAIN DRIP	ZERO INT'L
26B	11 RAIN DRIP	ZERO INT'L
27	DOOR TOP CAP	STEELCRAFT

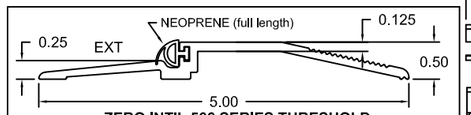

12A ZERO INT'L 566 SERIES THRESHOLD UP TO MAX. DESIGN PRESSURE +/- 75 PSF (SEE SHEET 1)

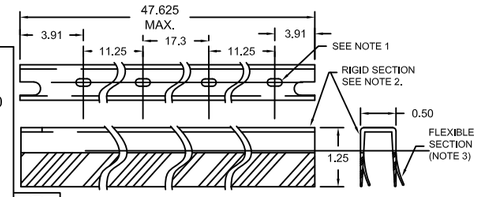

15 FAS-SEAL DOOR SWEEP

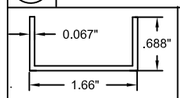

16 DOOR END CHANNEL

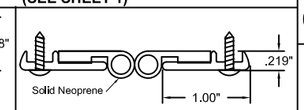

17A ZERO INT'L 328 SERIES SPLIT ASTRAGAL

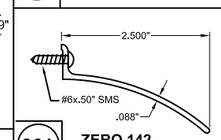

26A ZERO 142 RAIN DRIP

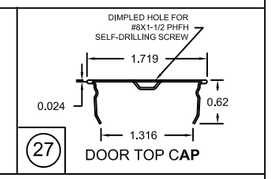

27 DOOR TOP CAP

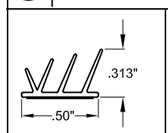

22A ZERO 8150S DOOR SEAL

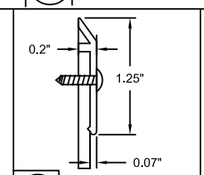

24A ZERO 139 DOOR SWEEP

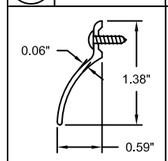

26B ZERO 11 RAIN DRIP

ZERO INT'L 566 THRESHOLD GASKETING SYSTEM REQUIREMENTS FOR WATER INFILTRATION - MAXIMUM DESIGN PRESSURE RATING 75PSF - (SEE SHEET 1)

FOR CONFIGURATIONS: 1, 2, 3A, 3B, 6 & 8 (SEE SHEET 1)

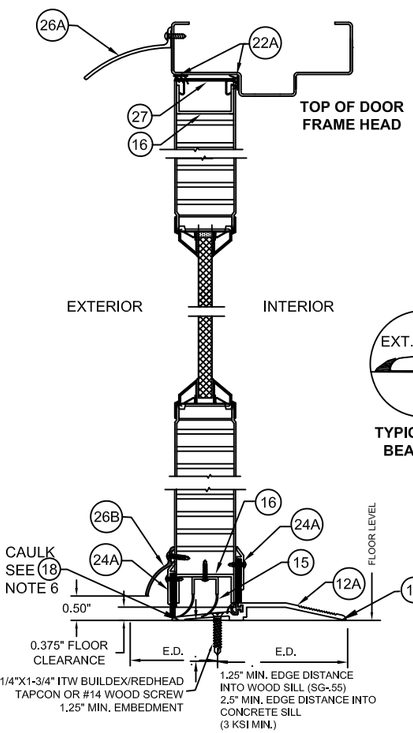

BOTTOM OF DOOR WEATHERSTRIPPING AND SILL INSTALLATION

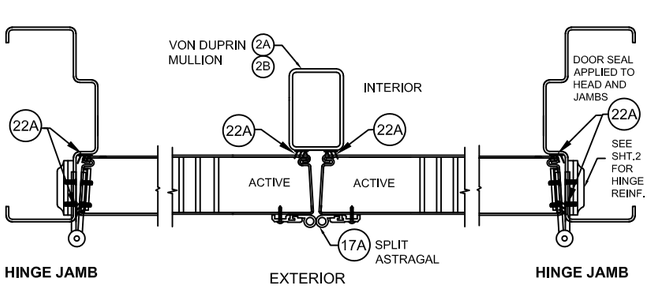

ZERO INT'L 566 THRESHOLD GASKETING SYSTEM REQUIREMENTS FOR WATER INFILTRATION - MAXIMUM DESIGN PRESSURE RATING 75PSF - (SEE SHEET 1)

FOR CONFIGURATIONS: 4 & 5 (SEE SHEET 1)

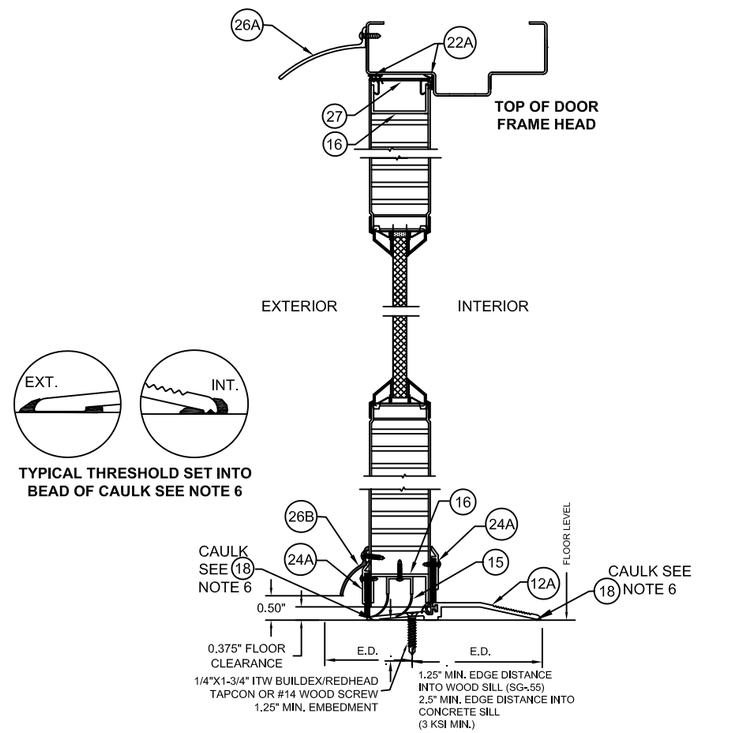

BOTTOM OF DOOR WEATHERSTRIPPING AND SILL INSTALLATION

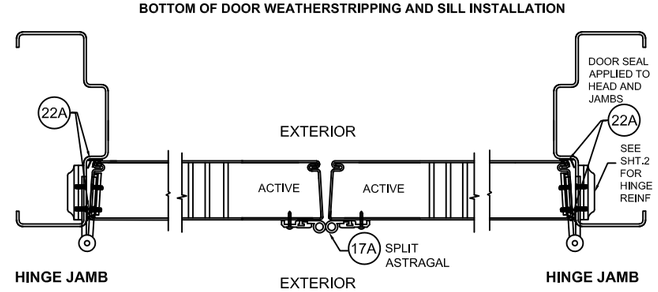

ZERO INT'L 566 THRESHOLD GASKETING SYSTEM REQUIREMENTS FOR WATER INFILTRATION - MAXIMUM DESIGN PRESSURE RATING 75PSF - (SEE SHEET 1)

FOR CONFIGURATIONS: 10 & 11 (SEE SHEET 1)

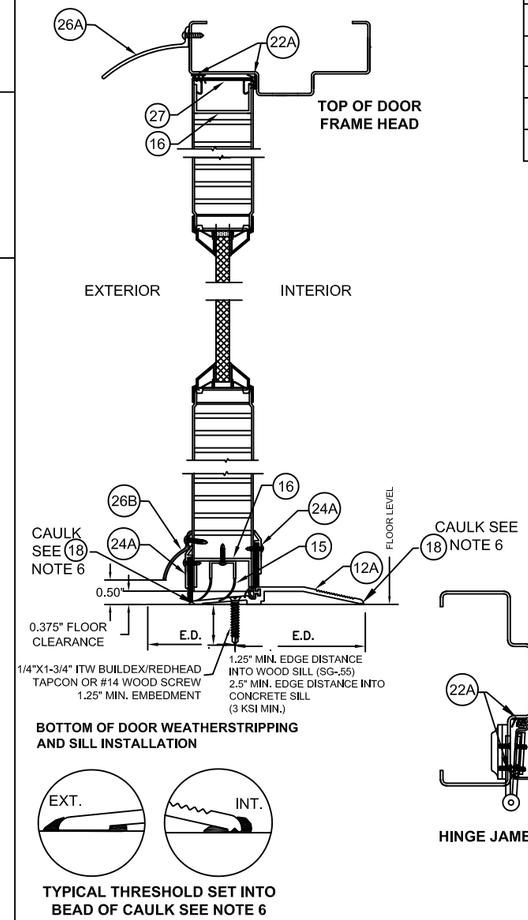

BOTTOM OF DOOR WEATHERSTRIPPING AND SILL INSTALLATION

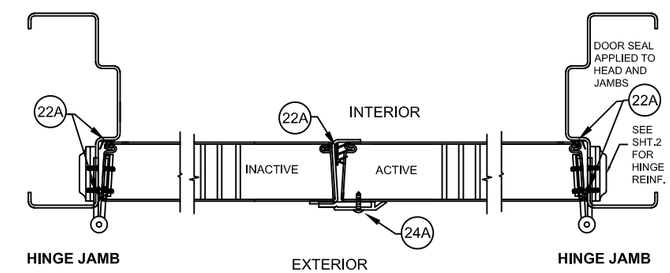

TYPICAL THRESHOLD SET INTO BEAD OF CAULK SEE NOTE 6

NOTES:
1. SLOT LOCATIONS MAY VARY WITH DIFFERENT DOOR WIDTH.
2. DOOR SWEEP RIGID SECTION IS MADE OF PRO-FAX #PD-199 POLYPROPYLENE HOMOPOLYMER.
3. DOOR SWEEP FLEXIBLE SECTION IS MADE OF SANTOPRENE #101-73
4. FAS-SEAL DOOR SWEEP (15), AND THRESHOLD (12A) ARE REQUIRED FOR ALL INSTALLATIONS.
5. SEAL ALL JOINTS WHERE FRAME MEETS WALL WITH BUTYL RUBBER OR SILICONE CAULK
6. INSTALL THRESHOLD INTO BEAD OF BUTYL RUBBER OR SILICONE CAULK FULL LENGTH OF SILL

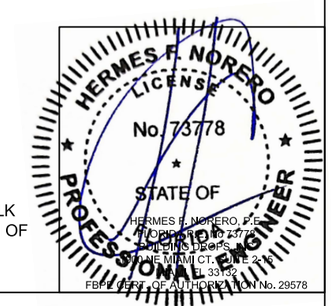

REVISIONS

LTR	DESCRIPTION	ENG	DATE
A	APPROVAL DWG	YMF	05/20/07
M	REVISED DWG	JPD	07/18/18
N	LOCK UPDATE	SM	11/27/19
O	LOCK UPDATE	ER	10/05/20
P	LOCK UPDATE	CA	05/19/22
Q	CODE UPDATE	DI	08/25/23
R	LOCK UPDATE	JA	10/14/24
S	MULLION UPDATE	DI	12/02/25

BEND RADIUS

THIRD ANGLE PROJECTION

DRAWN YMF	DATE 05/20/07
CHECKED	
APPROVED	
ENG. APPVL JPD	10/11/07

ALLEGION-SCHLAGE LOCK COMPANY, LLC
11819 N. PENNSYLVANIA STREET
CARMEL, IN 46032

TITLE: HARDWARE FOR DOUBLE GLAZED OUTSWING COMMERCIAL STEEL DOORS

DOUBLE GLAZED DOOR PERIMETER SEAL HARDWARE APPROVED WHERE WATER INFILTRATION IS REQUIRED

SIZE	FLAT	DWG NO.	REV
		IRGD07C	S

SCALE:	NTS	AUTOCAD	FL14482.4	SHEET 3 of 11

TABLE 3.2 WATER RATED PERIMETER SEAL HARDWARE - ZERO INT'L THRESHOLD 566

ITEM NUMBER	MODEL No./ DESCRIPTION	MFG.
12A	566 THRESHOLD	ZERO INT'L
15	FAS-SEAL SWEEP	STEELCRAFT
16	END CHANNEL	STEELCRAFT
22B	188S DOOR SEAL	ZERO INT'L
24A	139 DOOR SWEEP	ZERO INT'L
24B	328 DOOR SWEEP	ZERO INT'L
25A	475 ADJUSTABLE SEAL	ZERO INT'L
26A	142 RAIN DRIP	ZERO INT'L
26B	11 RAIN DRIP	ZERO INT'L
27	DOOR TOP CAP	STEELCRAFT

ZERO INT'L 566 THRESHOLD GASKETING SYSTEM REQUIREMENTS FOR WATER INFILTRATION - MAXIMUM DESIGN PRESSURE RATING 75PSF - (SEE SHEET 1)

FOR CONFIGURATIONS: 7 & 9 (SEE SHEET 1)

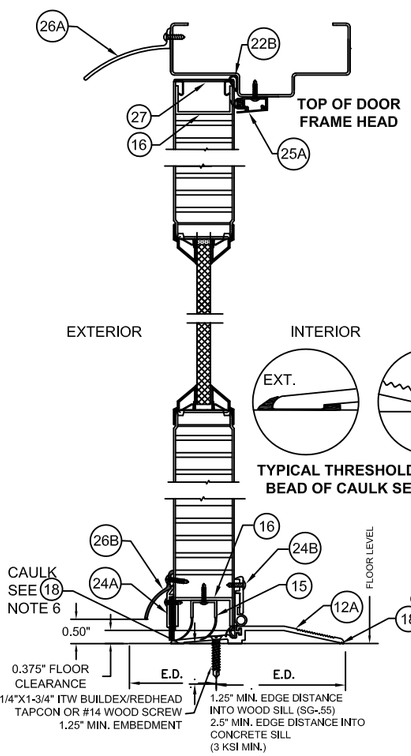

BOTTOM OF DOOR WEATHERSTRIPPING AND SILL INSTALLATION

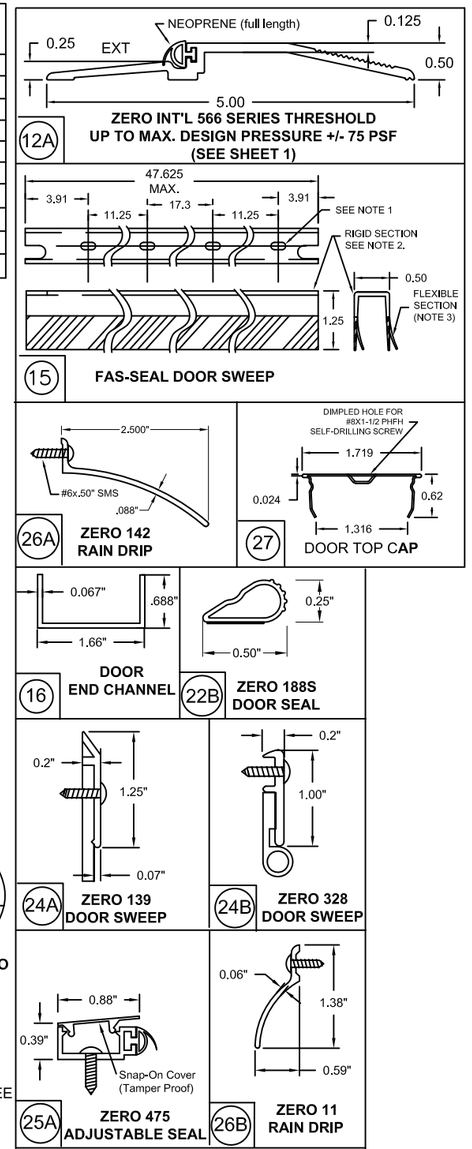

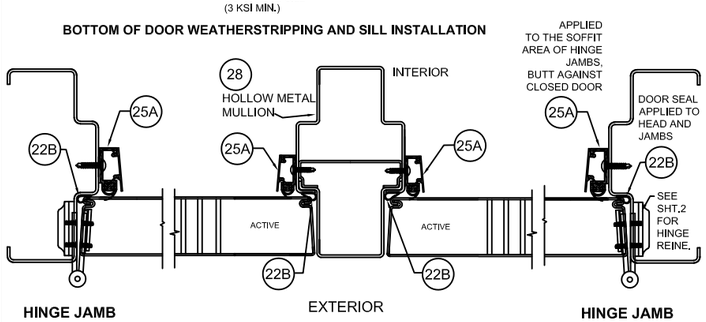

REVISIONS			
LTR	DESCRIPTION	ENG	DATE
A	APPROVAL DWG	YMF	05/20/07
M	REVISED DWG	JPD	07/18/18
N	LOCK UPDATE	SM	11/27/19
O	LOCK UPDATE	ER	10/05/20
P	LOCK UPDATE	CA	05/19/22
Q	CODE UPDATE	DI	08/25/23
R	LOCK UPDATE	JA	10/14/24
S	MULLION UPDATE	DI	12/02/25

NOTES:
1. SLOT LOCATIONS MAY VARY WITH DIFFERENT DOOR WIDTH.
2. DOOR SWEEP RIGID SECTION IS MADE OF PRO-FAX #PD-199 POLYPROPYLENE HOMOPOLYMER.
3. DOOR SWEEP FLEXIBLE SECTION IS MADE OF SANTOPRENE #101-73
4. FAS-SEAL DOOR SWEEP (15), AND THRESHOLD (12A OR 12B) AS APPLICABLE ARE REQUIRED FOR ALL INSTALLATIONS.
5. SEAL ALL JOINTS WHERE FRAME MEETS WALL WITH BUTYL RUBBER OR SILICONE CAULK
6. INSTALL THRESHOLD INTO BEAD OF BUTYL RUBBER OR SILICONE CAULK FULL LENGTH OF SILL

HERMES F. NORERO LICENSE No. 73778 STATE OF FLORIDA PROFESSIONAL ENGINEER
HERMES F. NORERO, P.E.
FLORIDA REG. NO. 73778
BUILDERS ENGINEERING
3000 NE 30th PLACE, 5th FLOOR
FORT LAUDERDALE, FL 33306
FBPE CERT. OF AUTHORIZATION No. 29578

BEND RADIUS

THIRD ANGLE PROJECTION

ALLEGION-SCHLAGE LOCK COMPANY, LLC
11819 N. PENNSYLVANIA STREET
CARMEL, IN 46032

TITLE: HARDWARE FOR DOUBLE GLAZED OUTSWING COMMERCIAL STEEL DOORS

DOUBLE GLAZED DOOR PERIMETER SEAL HARDWARE APPROVED WHERE WATER INFILTRATION IS REQUIRED

DRAWN	DATE
YMF	05/20/07
CHECKED	
APPROVED	
ENG. APPVL JPD	10/11/07

SIZE	FLAT	DWG NO.	REV
		IRGD07C	S

SCALE:	AUTOCAD	FL14482.4	SHEET 4 of 11
NTS			

TABLE 4.1 NON WATER RATED PERIMETER SEAL HARDWARE - ZERO INT'L THRESHOLDS

ITEM NUMBER	MODEL No./ DESCRIPTION		MFG.
12	12A	566 THRESHOLD	ZERO INT'L
	12B	65 THRESHOLD	ZERO INT'L
	12C	568 THRESHOLD	ZERO INT'L
14	14A	PS074 DOOR SEAL	STEELCRAFT
	14B	188S DOOR SEAL	ZERO INT'L
	14C	117S DOOR SEAL	ZERO INT'L
	14D	8144S DOOR SEAL	ZERO INT'L
	14E	8150S DOOR SEAL	ZERO INT'L
	14F	8145S DOOR SEAL	ZERO INT'L
15	FAS-SEAL SWEEP		STEELCRAFT
16	END CHANNEL		STEELCRAFT
17A	328 SPLIT ASTRAGAL		ZERO INT'L
24A	139 DOOR SWEEP		ZERO INT'L
24B	328 DOOR SWEEP		ZERO INT'L
24C	39 DOOR SWEEP		ZERO INT'L

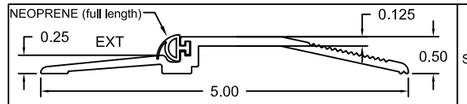

12A ZERO INT'L 566 SERIES THRESHOLD MAXIMUM DESIGN PRESSURE +/- 75 PSF (SEE SHEET 1)

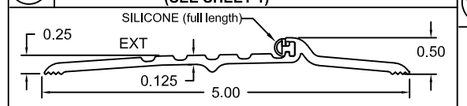

12B ZERO INT'L 65 SERIES THRESHOLD MAXIMUM DEISGN PRESSURE +/- 70 PSF (SEE SHEET 1)

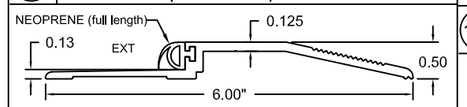

12C ZERO INT'L 568 SERIES THRESHOLD MAXIMUM DESIGN PRESSURE +/- 75 PSF (SEE SHEET 1)

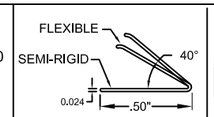

14A PS-074 STEELCRAFT DOOR SEAL

14B ZERO 188S DOOR SEAL

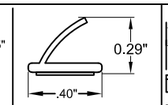

14C ZERO 117S DOOR SEAL

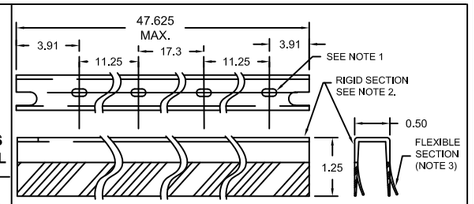

15 FAS-SEAL DOOR SWEEP

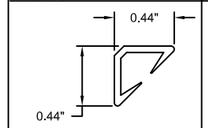

14D ZERO 8144S DOOR SEAL

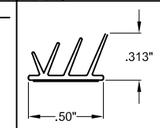

14E ZERO 8150S DOOR SEAL

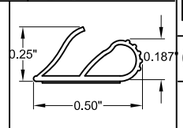

14F ZERO 8145S DOOR SEAL

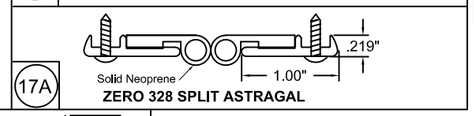

17A ZERO 328 SPLIT ASTRAGAL

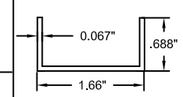

16 DOOR END CHANNEL

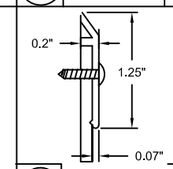

24A ZERO 139 DOOR SWEEP

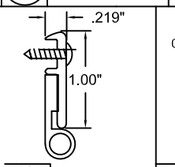

24B ZERO 328 DOOR SWEEP

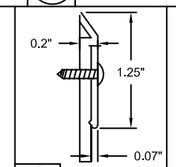

24C ZERO 39 DOOR SWEEP

REVISIONS

LTR	DESCRIPTION	ENG	DATE
A	APPROVAL DWG	YMF	05/20/07
M	REVISED DWG	JPD	07/18/18
N	LOCK UPDATE	SM	11/27/19
O	LOCK UPDATE	ER	10/05/20
P	LOCK UPDATE	CA	05/19/22
Q	CODE UPDATE	DI	08/25/23
R	LOCK UPDATE	JA	10/14/24
S	MULLION UPDATE	DI	12/02/25

ZERO INT'L 566 AND 568 THRESHOLD GASKETING SYSTEM REQUIREMENTS WHEN WATER INFILTRATION IS NOT REQUIRED MAXIMUM DESIGN PRESSURE RATING 75 PSF

ZERO INT'L 65 THRESHOLD GASKETING SYSTEM REQUIREMENTS WHEN WATER INFILTRATION IS NOT REQUIRED MAXIMUM DESIGN PRESSURE RATING 70 PSF MAXIMUM DOOR SIZE 4'-0" X 8'-0" (SEE SHEET 1)

ALL CONFIGURATIONS

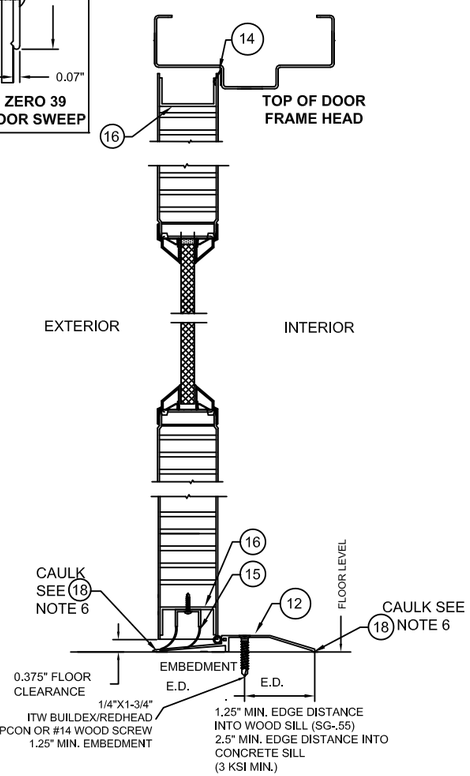

BOTTOM OF DOOR WEATHERSTRIPPING AND SILL INSTALLATION

FOR CONFIGURATIONS: 1, 2, 3A, 3B, 6 & 8 (SEE SHEET 1)

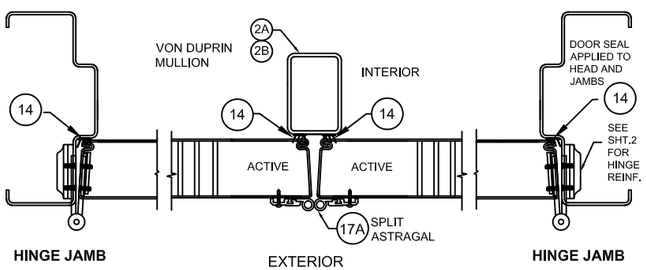

FOR CONFIGURATIONS: 4 & 5 (SEE SHEET 1)

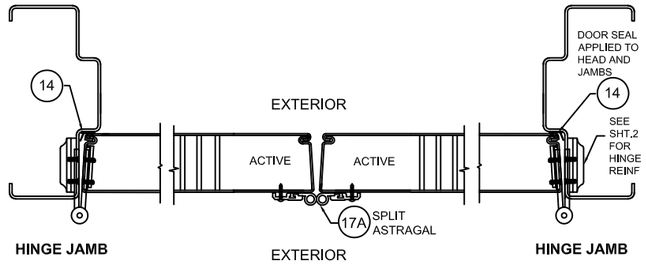

FOR CONFIGURATIONS: 7 & 9 (SEE SHEET 1)

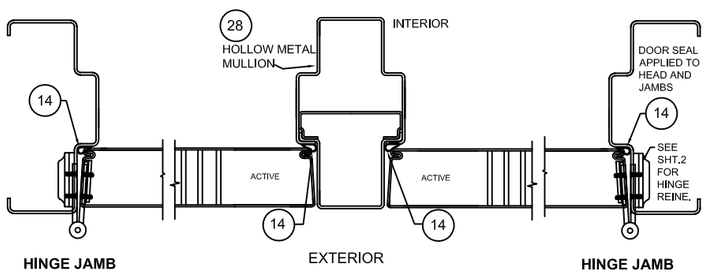

FOR CONFIGURATIONS: 10 & 11 (SEE SHEET 1)

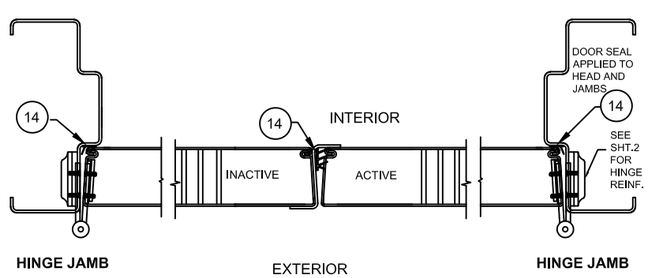

NOTES:
1. SLOT LOCATIONS MAY VARY WITH DIFFERENT DOOR WIDTH.
2. DOOR SWEEP RIGID SECTION IS MADE OF PRO-FAX #PD-199 POLYPROPYLENE HOMOPOLYMER.
3. DOOR SWEEP FLEXIBLE SECTION IS MADE OF SANTOPRENE #101-73
4. FAS-SEAL DOOR SWEEP (15), DOOR SEAL (14A, 14B, 14C, 14D, 14E) AND THRESHOLD (12A, 12B, 12C) AS APPLICABLE, ARE REQUIRED FOR ALL INSTALLATIONS.
5. SEAL ALL JOINTS WHERE FRAME MEETS WALL WITH BUTYL RUBBER OR SILICONE CAULK
6. INSTALL THRESHOLD INTO BEAD OF BUTYL RUBBER OR SILICONE CAULK FULL LENGTH OF SILL

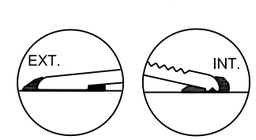

TYPICAL THRESHOLD SET INTO BEAD OF CAULK SEE NOTE 6

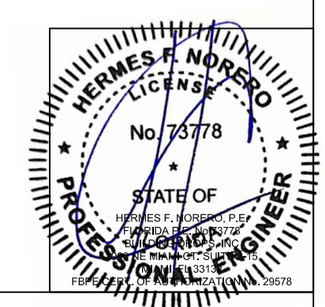

BEND RADIUS / THIRD ANGLE PROJECTION		ALLEGION-SCHLAGE LOCK COMPANY, LLC 11819 N. PENNSYLVANIA STREET CARMEL, IN 46032			
DRAWN YMF	DATE 05/20/07	TITLE: HARDWARE FOR DOUBLE GLAZED OUTSWING COMMERCIAL STEEL DOORS			
CHECKED		DOUBLE GLAZED DOOR PERIMETER SEAL ZERO INT'L HARDWARE APPROVED WHERE WATER INFILTRATION IS NOT REQUIRED			
APPROVED		SIZE	FLAT	DWG NO. IRGD07C	REV S
ENG. APPVL JPD	10/11/07	SCALE: NTS	AUTOCAD	FL14482.4	SHEET 5 of 11

GLAZING TYPE 1

GLAZING DETAIL 'D'
DEZIGNER TRIM OPTION

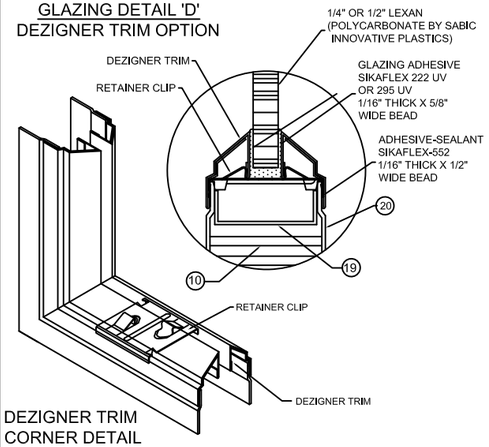

DEZIGNER TRIM
CORNER DETAIL

GLAZING TYPE 1

GLAZING DETAIL 'E'
STEEL TRIM OPTION

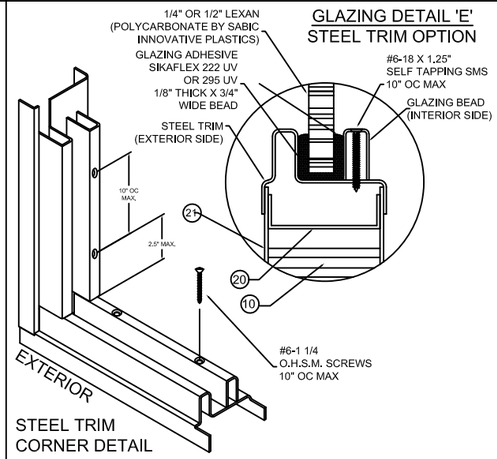

STEEL TRIM
CORNER DETAIL

GLAZING TYPE 2

GLAZING DETAIL 'K'
LAMINATED GLASS

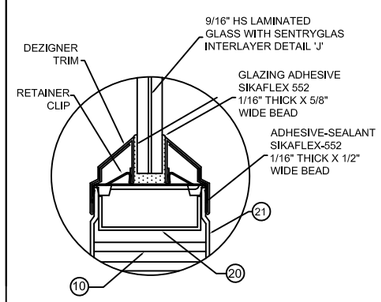

DEZIGNER TRIM

GLAZING TYPE 2

GLAZING DETAIL 'L'
LAMINATED GLASS

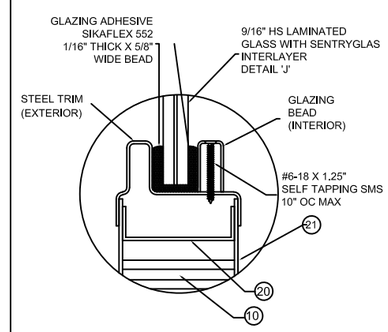

STEEL TRIM

REVISIONS

LTR	DESCRIPTION	ENG	DATE
A	APPROVAL DWG	YMF	05/20/07
M	REVISED DWG	JPD	07/18/18
N	LOCK UPDATE	SM	11/27/19
O	LOCK UPDATE	ER	10/05/20
P	LOCK UPDATE	CA	05/19/22
Q	CODE UPDATE	DI	08/25/23
R	LOCK UPDATE	JA	10/14/24
S	MULLION UPDATE	DI	12/02/25

LAMINATED GLASS DETAILS

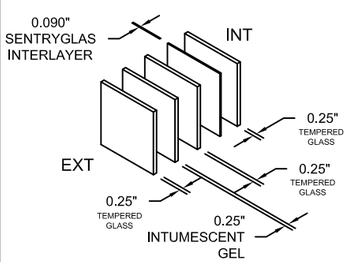

CONSTRUCTION DETAIL 'H'
1-1/16" SUPERLITE II-XL™
BY SAFTI
WITH SENTRYGLAS INTERLAYER

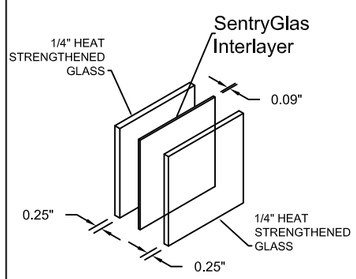

CONSTRUCTION DETAIL 'J'
9/16" HS LAMINATED GLASS WITH
SENTRYGLAS INTERLAYER

GLAZING TYPE 3

GLAZING DETAIL 'G'
1" STEEL TRIM OPTION

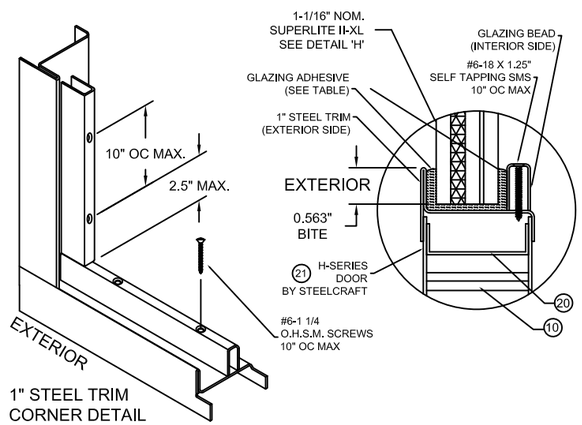

1" STEEL TRIM
CORNER DETAIL

TABLE 5.

GLAZING TYPES AND METHODS

GLAZING TYPE	GLAZING MATERIAL	TRIM TYPE	SEALANT -ADHESIVE	GLAZING ADHESIVE
1	LEXAN BY SABIC INNOVATIVE PLASTICS 1/4" OR 1/2" DETAILS 'D' & 'E'	DEZIGNER 1/2" OR 1/4"	SIKAFLEX 552	SIKAFLEX 222UV OR 295UV 1/16" X 5/8" BEAD
		STEEL TRIM		
2	9/16" HS LAMINATED GLASS WITH SENTRYGLAS INTERLAYER DETAILS 'J', 'K' & 'L'	DEZIGNER 1/2"	SIKAFLEX 552	SIKAFLEX 552 OR DOW CORNING 995/975/983 1/16" X 5/8" BEAD
		STEEL TRIM		
		1" STEEL TRIM		
3	SUPERLITE II-XL™ BY SAFTI WITH SENTRYGLAS INTERLAYER DETAILS 'H', 'F' & 'G'	1" STEEL TRIM (DETAIL 'G')	NONE	SIKAFLEX 552 OR DOW CORNING 995/975/983 1/16" X 5/8" BEAD

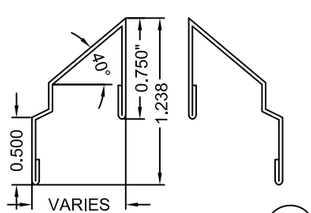

DEZIGNER TRIM PROFILE 19-1
MATERIAL: 24 GA A40 STEEL

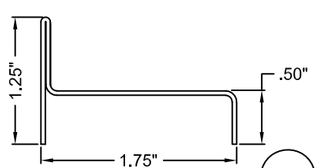

1" STEEL TRIM 19-3
MATERIAL: 20 GAGE A40 STEEL

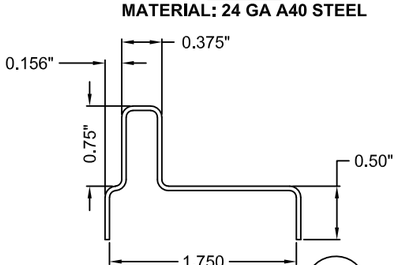

STEEL TRIM 19-2
MATERIAL: 20GA A40 STEEL

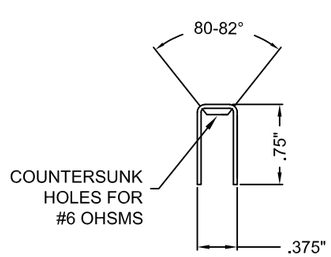

GLAZING BEAD FOR STEEL OVERLAPPING TRIMS
20 GAGE A40 STL

NOTES:

1. SEE SHT.1 FOR ELEVATIONS, SHT.1 FOR SIZES AND SHT.2 FOR DOOR & FRAME MATERIAL SPECIFICATIONS.

HERMES F. NORERO LICENSE No. 73778 STATE OF FLORIDA PROFESSIONAL ENGINEER
HERMES F. NORERO, P.E.
FLORIDA REG. No. 73778
BUILDER SERVICES, INC.
FBPE CERT. OF AUTHORIZATION No. 29578

BEND RADIUS		ALLEGION-SCHLAGE LOCK COMPANY, LLC 11819 N. PENNSYLVANIA STREET CARMEL, IN 46032
THIRD ANGLE PROJECTION		TITLE: HARDWARE FOR DOUBLE OUTSWING GLAZED COMMERCIAL STEEL DOOR GLASS TRIM OPTIONS.
DRAWN YMF	DATE 05/20/07	
CHECKED		
APPROVED		SIZE / FLAT / DWG NO. IRGD07C / REV S
ENG. APPVL JPD	11/15/07	SCALE: NTS / AUTOCAD / FL14482.4 / SHEET 6 of 11

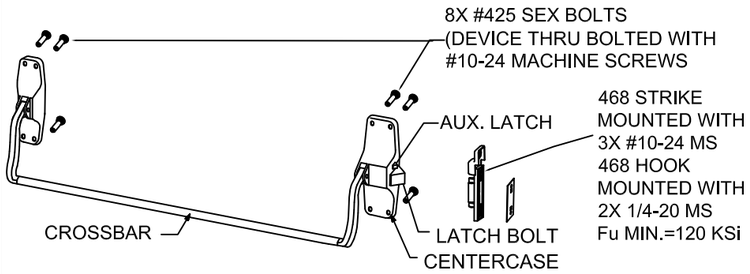

VON DUPRIN 88-F RIM DEVICE, USED IN CONFIGURATIONS: 1 & 2

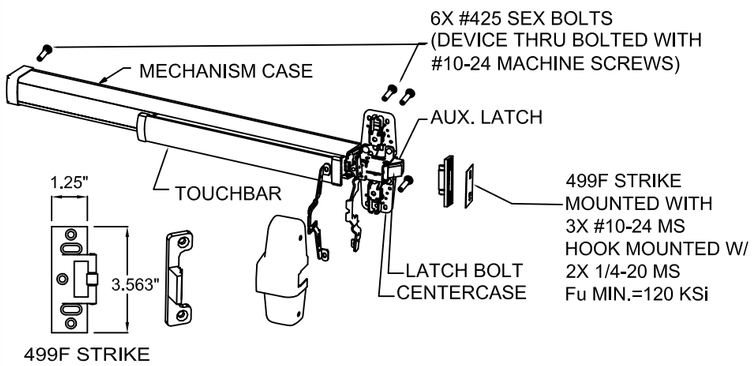

VON DUPRIN 98, 99, 98-F, 99-F, HH78 & HH78-F RIM EXIT DEVICE
USED IN CONFIGURATIONS: 1 & 2

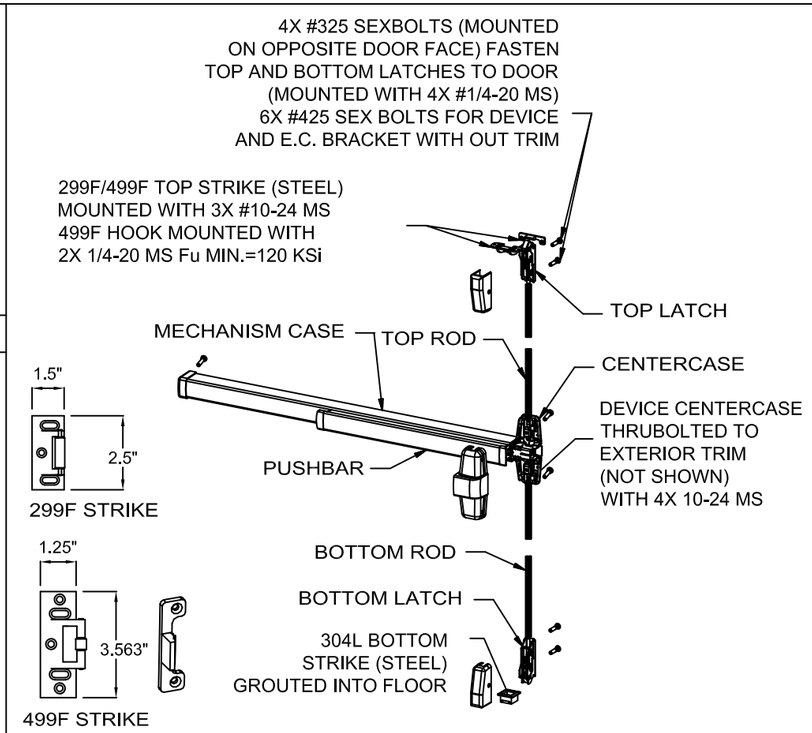

499F TOP STRIKE AND HOOK REQUIRED FOR CONFIGURATION:4B

VON DUPRIN 9827, 9927, 9827-F, 9927-F, HH7827 & HH7827-F SURFACE
VERTICAL ROD DEVICE USED IN CONFIGURATION: 4A & 4B

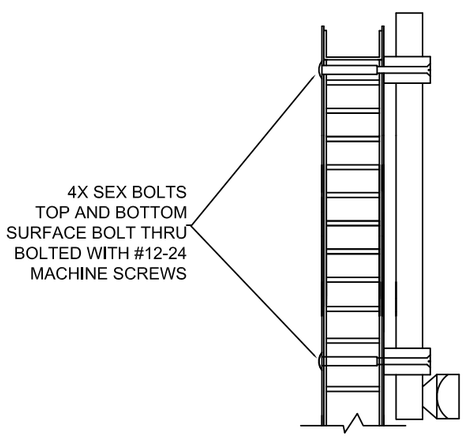

IVES SURFACE BOLT SB360
USED ON INACTIVE DOOR FOR CONFIGURATIONS: 10 & 11

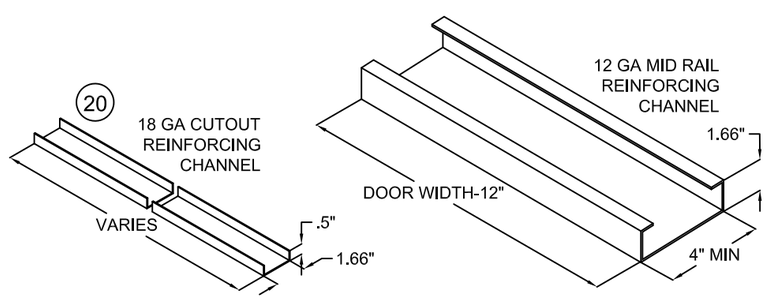

REVISIONS

LTR	DESCRIPTION	ENG	DATE
A	APPROVAL DWG	YMF	05/20/07
M	REVISED DWG	JPD	07/18/18
N	LOCK UPDATE	SM	11/27/19
O	LOCK UPDATE	ER	10/05/20
P	LOCK UPDATE	CA	05/19/22
Q	CODE UPDATE	DI	08/25/23
R	LOCK UPDATE	JA	10/14/24
S	MULLION UPDATE	DI	12/02/25

GLAZING MATERIAL SEE TABLE 5 ON SHEET 6.
SEE SHEETS 1, 2 AND 6 FOR INFORMATION ON DAYLIGHT
OPENING, GLASS TYPES AND SIZE LIMITATIONS

SECTION R-R
HORIZONTAL MID-RAIL

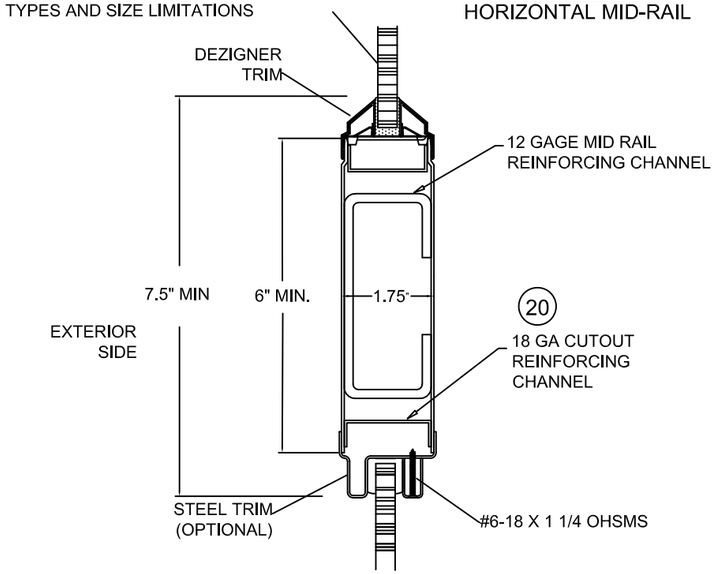

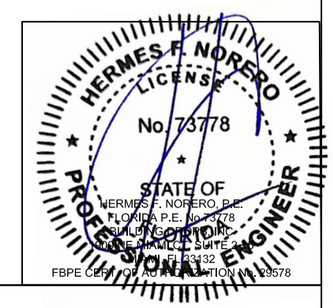

NOTES:
1. ELECTRIFIED AND FIRE RATED OPTIONS OF APPROVED HARDWARE ARE ACCEPTABLE. INSTALLATION AND APPLICATION IS UNDER SEPARATE APPROVAL AND IS REVIEWED BY THE CORRESPONDING AUTHORITY.
2. EXIT HARDWARE OPTIONS:
FOR 98/99, XP98/99 & HH78 SERIES - OPTIONS E, RX, LX, SS, EL, QEL, CX, F, ALK, CD, PN
TRIM: ALL APPLICABLE TRIMS AVAILABLE.
FOR 88-F SERIES - OPTION E; PN MODEL OFFERED.
TRIM: ALL APPLICABLE TRIMS AVAILABLE.

BEND RADIUS

THIRD ANGLE PROJECTION

DRAWN YMF	DATE 05/20/07
CHECKED	CDATE
APPROVED	ADATE
ENG. APPVL JPD	EDATE 11/15/07

ALLEGION-SCHLAGE LOCK COMPANY, LLC
11819 N. PENNSYLVANIA STREET CARMEL, IN
46032

TITLE: HARDWARE FOR DOUBLE OUTSWING GLAZED COMMERCIAL STEEL DOORS

EXIT HARDWARE FOR GLASS DOUBLE DOORS.

SIZE	FLAT	DWG NO.	REV
		IRGD07C	Q

SCALE: NTS | AUTOCAD | FL14482.4 | SHEET 7 OF 11

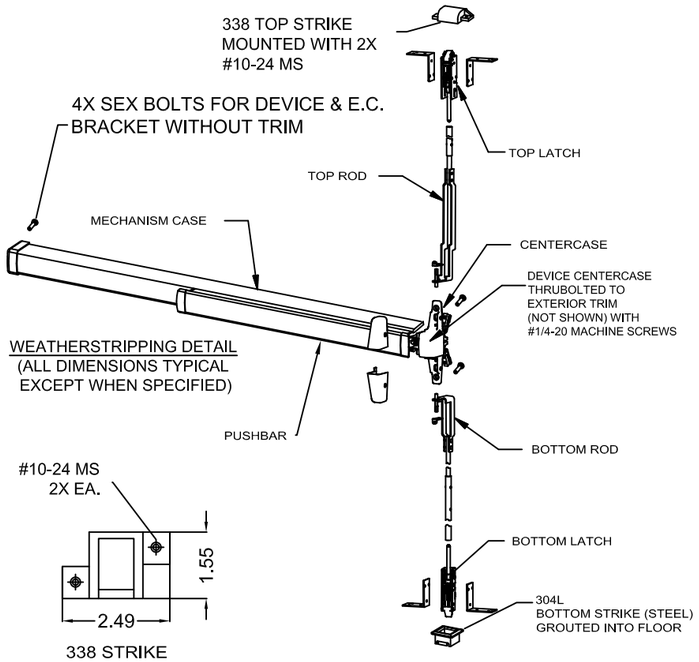

VON DUPRIN 9847-F, 9947-F, HH9847, HH9947. HH7847 & HH7847-F
WITH 2-3/4" BACKSET CONCEALED VERTICAL ROD DEVICE
USED IN CONFIGURATION: 5

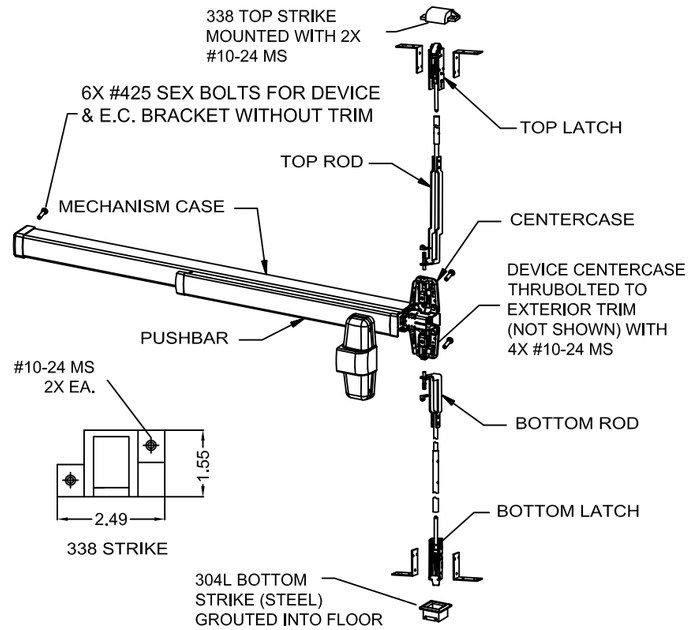

REVISIONS

LTR	DESCRIPTION	ENG	DATE
A	APPROVAL DWG	YMF	05/20/07
M	REVISED DWG	JPD	07/18/18
N	LOCK UPDATE	SM	11/27/19
O	LOCK UPDATE	ER	10/05/20
P	LOCK UPDATE	CA	05/19/22
Q	CODE UPDATE	DI	08/25/23
R	LOCK UPDATE	JA	10/14/24
S	MULLION UPDATE	DI	12/02/25

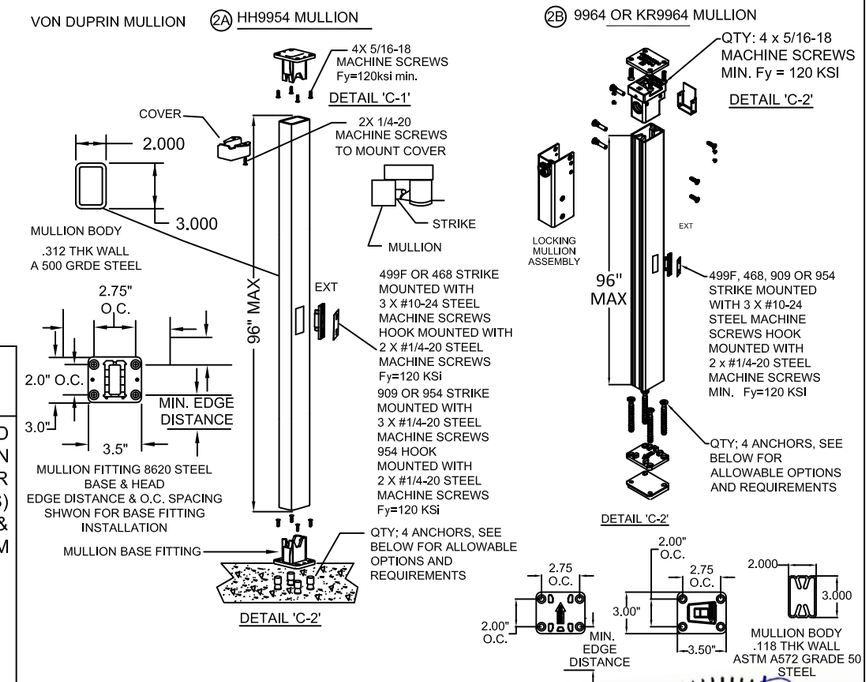

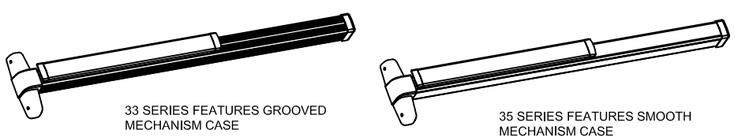

VON DUPRIN 3347A-F, 3547A-F, HH3347A, HH3547A, HH7547 & HH7547-F WITH
2-3/4" BACKSET CONCEALED VERTICAL ROD DEVICE
USED IN CONFIGURATION: 5

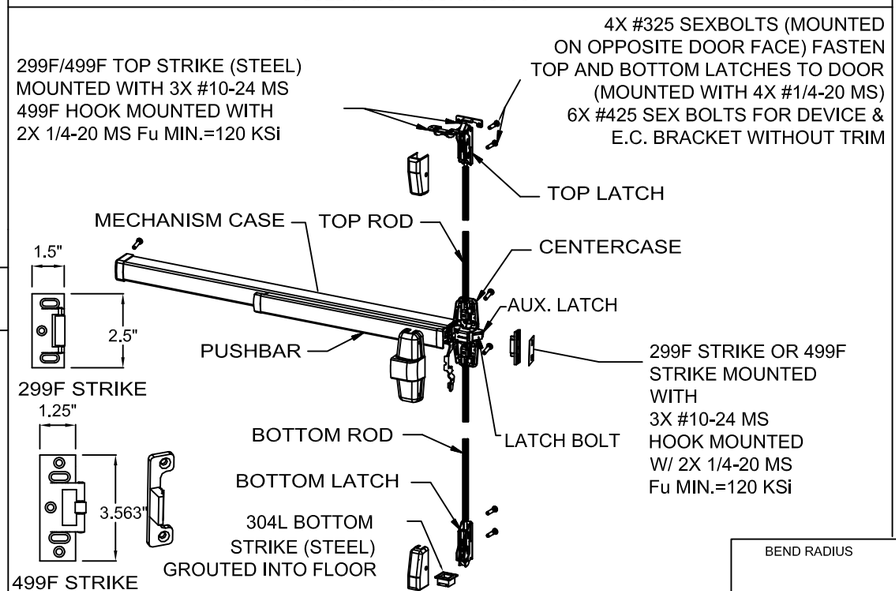

VON DUPRIN 9857, 9957, 9857-F, 9957-F THREE POINT EXIT DEVICE
USED IN CONFIGURATIONS: 6, 7, 8 & 9

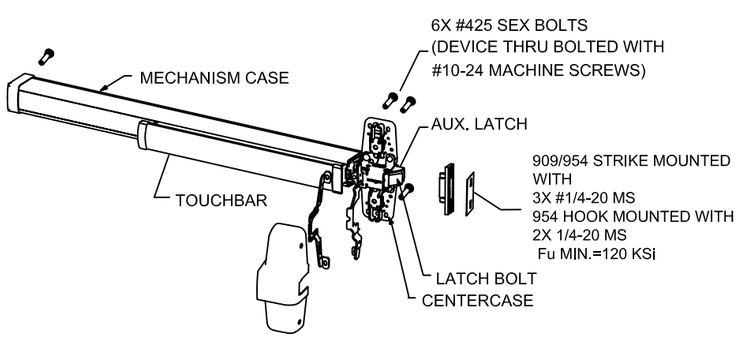

VON DUPRIN XP98, XP99, XP98-F, XP99-F RIM DEVICE
USED IN CONFIGURATIONS: 3A & 3B

MULLION EXPANSION ANCHOR NOTES:
ALLOWABLE ANCHOR TYPES ARE (SEE ABOVE FOR SPACING REQUIREMENTS):
1/4" DEWALT/POWERS SMART DI+ EXPANSION ANCHORS WITH MIN 1" EMBEDMENT AND 2.8" EDGE DISTANCE IN 3000 PSI CONCRETE
OR
1/4" HILTI KB-TZ2 (CS OR SS) WITH 1-1/2" EMBEDMENT WITH MIN 3.25" MIN EDGE DISTANCE IN 4000 PSI CONCRETE
OR
1/4" CS SIMPSON TITEN HD (316 S.S.) HEAVY-DUTY WITH MINIMUM 2.8" MIN. EDGE DISTANCE IN 3000 PSI CONCRETE

HERMES F. NORERO LICENSE No. 73778 STATE OF FLORIDA PROFESSIONAL ENGINEER
HERMES F. NORERO, P.E.
FLORIDA P.E. No 73778
BUILDING CONSULTING
[illegible] SUITE 2[illegible]
[illegible], FL 33332
FBPE CERT OF AUTHORIZATION No. 29578

NOTE: ELECTRIFIED AND FIRE RATED OPTIONS OF APPROVED HARDWARE ARE ACCEPTABLE. INSTALLATION AND APPLICATION IS UNDER SEPARATE APPROVAL AND IS REVIEWED BY THE CORRESPONDING AUTHORITY.
EXIT HARDWARE OPTIONS:
FOR 98/99, XP98/99, HH75 & HH78 SERIES - OPTIONS E, RX, LX, SS, EL, QEL, CX, F, ALK, CD, PN (OPTIONS MAY VARY PER SERIES)
TRIM: ALL APPLICABLE TRIMS AVAILABLE.
FOR 33/35-F SERIES - OPTIONS RX, LX, E, QEL, EL, SS, CX, F, ALK, CD, PN, LD
TRIM: ALL APPLICABLE TRIMS AVAILABLE.

BEND RADIUS

THIRD ANGLE PROJECTION

DRAWN	YMF	DATE 05/20/07
CHECKED		
APPROVED		
ENG. APPVL	JPD	11/15/07

ALLEGION-SCHLAGE LOCK COMPANY, LLC
11819 N. PENNSYLVANIA STREET
CARMEL, IN 46032

TITLE: HARDWARE FOR DOUBLE OUTSWING GLAZED COMMERCIAL STEEL DOORS

EXIT HARDWARE FOR GLASS DOUBLE DOORS.

SIZE	FLAT	DWG NO.	REV
		IRGD07C	Q

SCALE:	NTS	AUTOCAD	FL14482.4	SHEET 8 OF 11

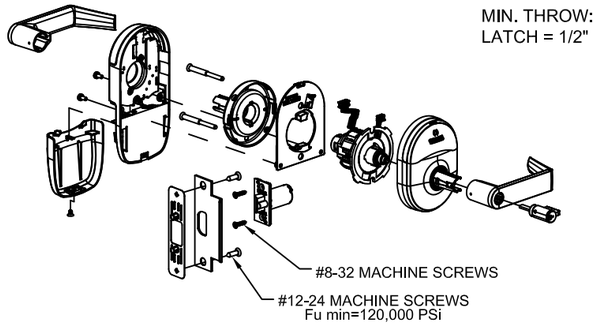

SCHLAGE NDE & NDEB SERIES CYLINDRICAL LOCKSET
USED IN CONFIGURATIONS: 11

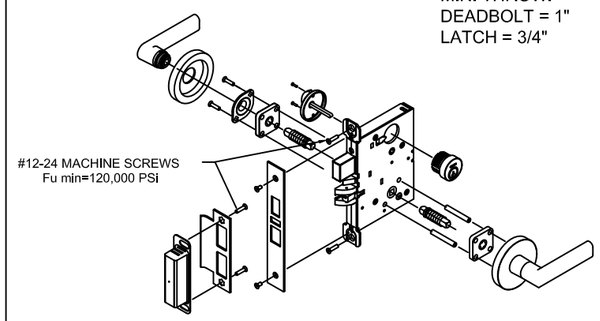

SCHLAGE L/LV 9400 & PM400 SERIES MORTISE
LOCKESET W/DEADBOLT USED IN CONFIGURATION:10

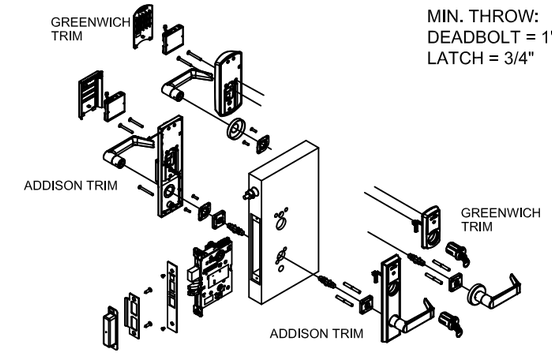

SCHLAGE LE-MD & LEB-MD SERIES MORTISE LOCKSET W/
DEADBOLT USED IN CONFIGURATION:1O

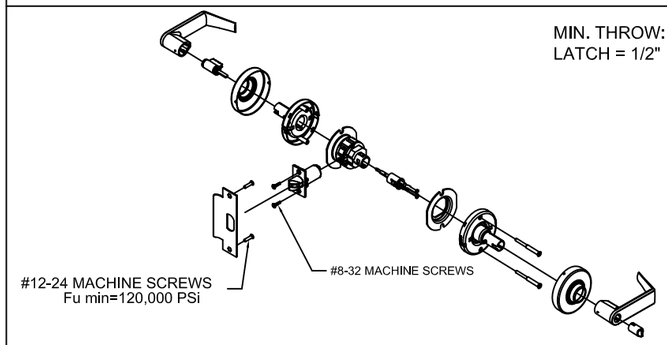

SCHLAGE D/ND-SERIES CYLINDRICAL LOCKSET.
USED IN CONFIGURATION: 11

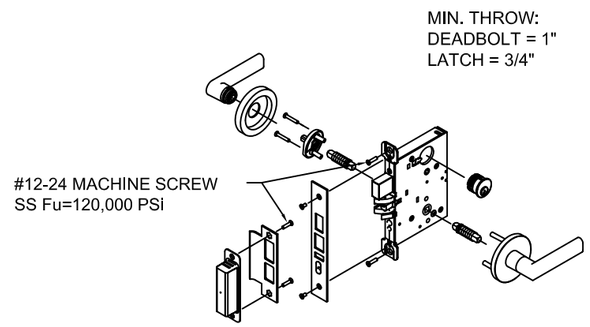

FALCON MA-SERIES MORTISE LOCKSET W/ DEADBOLT
USED IN CONFIGURATION: 10

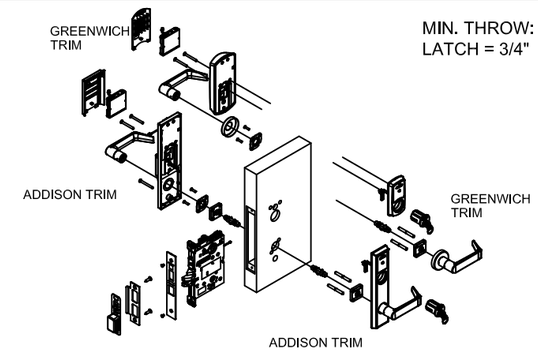

SCHLAGE LE-MS, LEB-MS, LE-MB, LEB-MB SERIES
MORTISE LOCKSET W/O DEADBOLT. USED IN
CONFIGURATION: 10

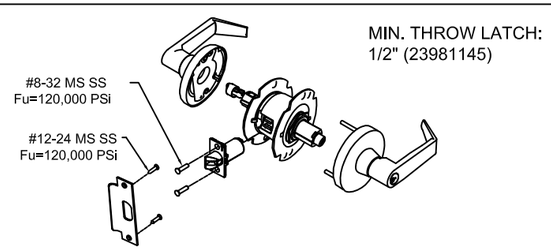

FALCON, T & TM SERIES CYLINDRICAL LEVER LOCKSET
USED IN CONFIGURATION: 11

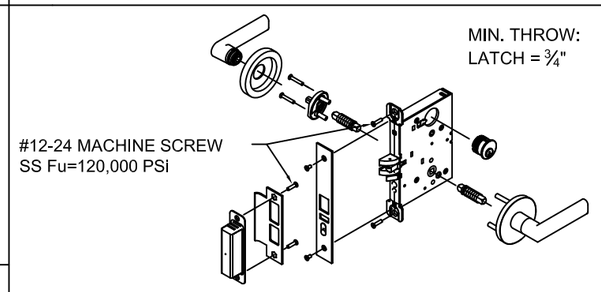

FALCON MA-SERIES MORTISE LOCKSET W/O DEADBOLT
USED IN CONFIGURATION: 10

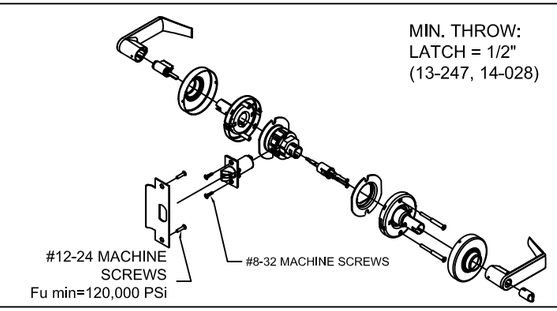

SCHLAGE ALX & PC SERIES CYLINDRICAL LOCKSET.
USED IN CONFIGURATION: 11

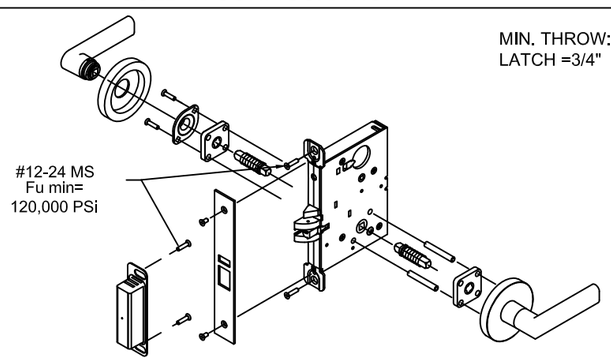

SCHLAGE L/LV 9000 & PM SERIES MORTISE LOCK WITHOUT
DEADBOLT USED IN CONFIGURATION: 10

NOTES:
1. ELECTRIFIED AND FIRE RATED OPTIONS OF APPROVED HARDWARE ARE ACCEPTABLE. INSTALLATION AND APPLICATION IS UNDER SEPARATE APPROVAL AND IS REVIEWED BY THE CORRESPONDING AUTHORITY.
2. ELECTRIFIED FUNCTIONS APPROVED , BUT NOT SHOWN ABOVE.

REVISIONS

LTR	DESCRIPTION	ENG	DATE
A	APPROVAL DWG	YMF	05/20/07
M	REVISED DWG	JPD	07/18/18
N	LOCK UPDATE	SM	11/27/19
O	LOCK UPDATE	ER	10/05/20
P	LOCK UPDATE	CA	05/19/22
Q	CODE UPDATE	DI	08/25/23
R	LOCK UPDATE	JA	10/14/24
S	MULLION UPDATE	DI	12/02/25

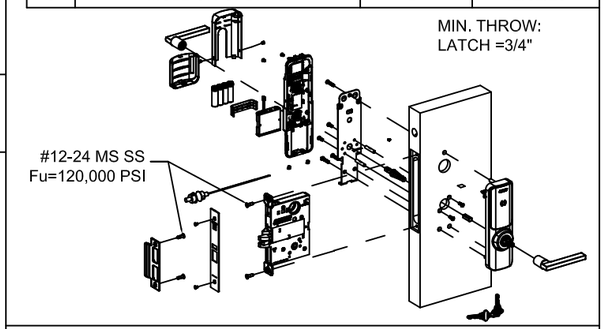

SCHLAGE XE360-M-B & XE360-M-I SERIES MORTISE
LOCKSET WITHOUT DEADBOLT
USED IN CONFIGURATION: 10

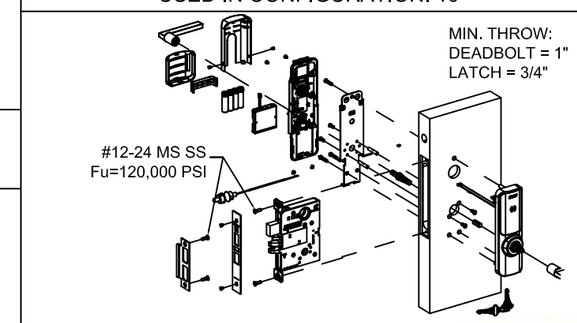

SCHLAGE XE360-M-D SERIES
MORTISE LOCKSET W/
DEADBOLT
USED IN CONFIGURATION: 10

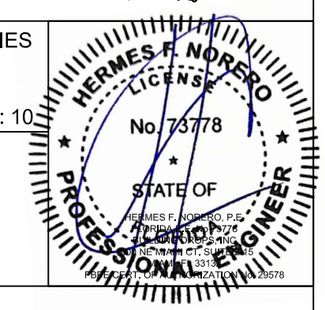

BEND RADIUS

THIRD ANGLE PROJECTION

DRAWN YMF	DATE 05/20/07
CHECKED	
APPROVED	
ENG. APPVL JPD	10/12/07

ALLEGION-SCHLAGE LOCK COMPANY, LLC
11819 N. PENNSYLVANIA STREET
CARMEL. IN 46032

TITLE:HARDWARE FOR DOUBLE OUTSWING GLAZED COMMERCIAL STEEL DOORS

HARDWARE FOR GLASS DOUBLE DOORS.

SIZE	FLAT	DWG NO.	REV
		IRGD07C	Q

SCALE:	NTS	AUTOCAD	FL14482.4	SHEET 9 OF 11

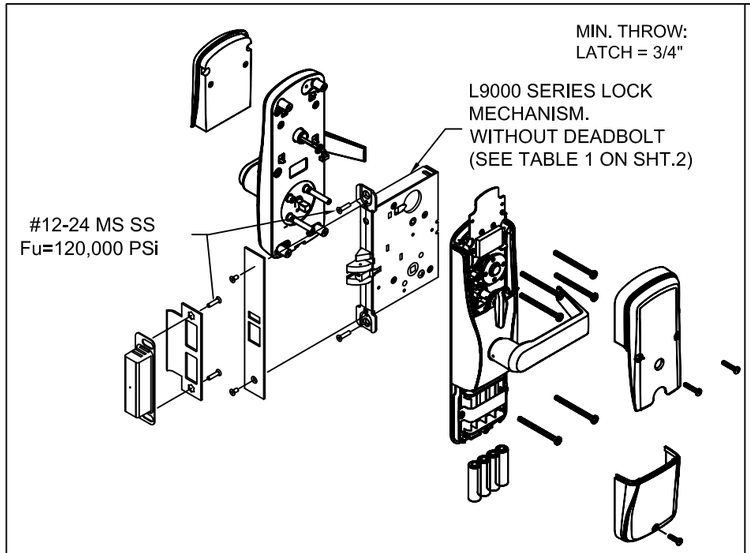

SCHLAGE AD-MS & CO-MS SERIES MORTISE LOCKSET
USED IN CONFIGURATIONS: 10 (SEE SHT. 1)

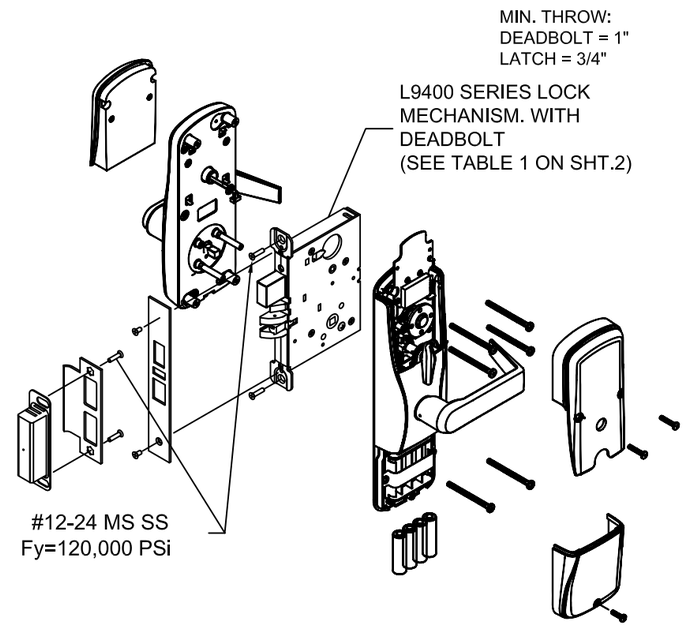

SCHLAGE AD-MD & CO-MD SERIES MORTISE LOCKSET
USED IN CONFIGURATIONS: 10 (SEE SHT.1)

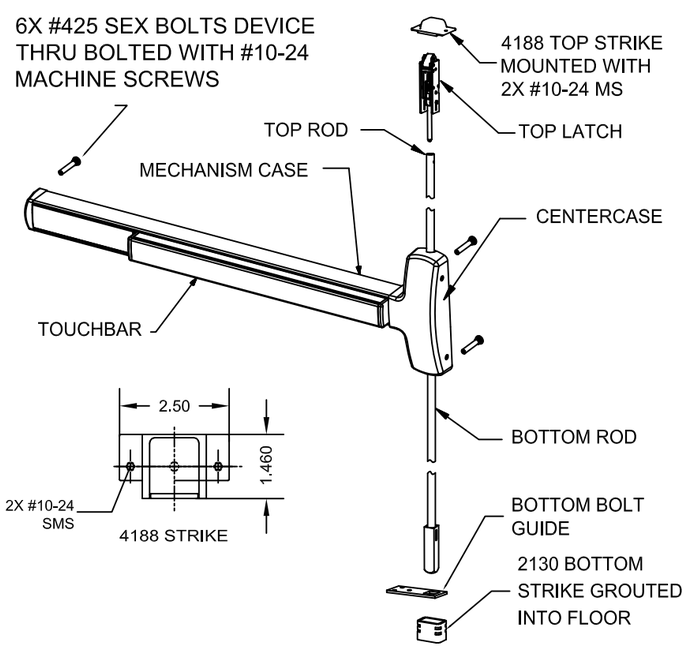

FALCON F-25-C **CONCEALED VERTICAL ROD EXIT DEVICE**
USED IN **DOOR CONFIGURATION 5** (SEE SHT.1)

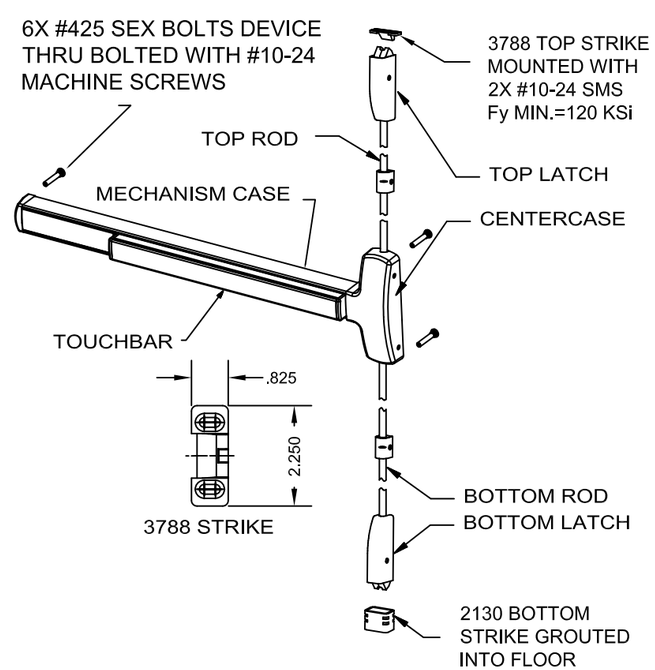

FALCON 25-V F-25-V **SURFACE VERTICAL ROD EXIT DEVICE**
USED IN **DOOR CONFIGURATION 4** (SEE SHT.1)

REVISIONS

LTR	DESCRIPTION	ENG	DATE
A	APPROVAL DWG	YMF	05/20/07
M	REVISED DWG	JPD	07/18/18
N	LOCK UPDATE	SM	11/27/19
O	LOCK UPDATE	ER	10/05/20
P	LOCK UPDATE	CA	05/19/22
Q	CODE UPDATE	DI	08/25/23
R	LOCK UPDATE	JA	10/14/24
S	MULLION UPDATE	DI	12/02/25

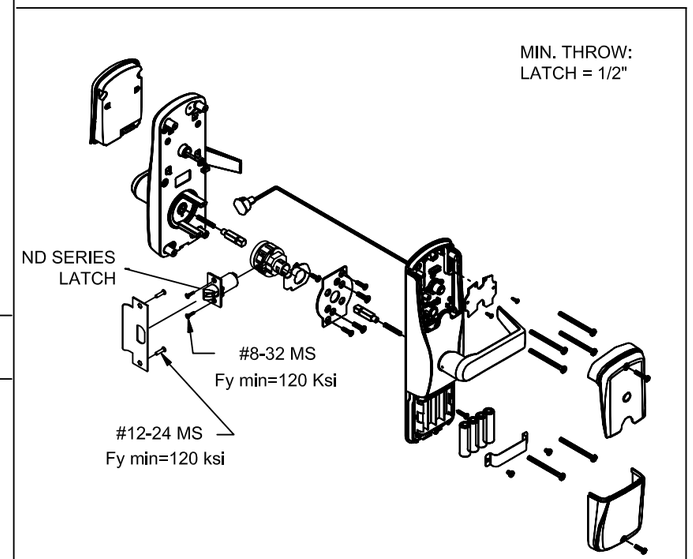

SCHLAGE AD-CY & CO-CY SERIES CYLINDRICAL LOCKSET
USED IN CONFIGURATIONS: 11 (SEE SHT.1)

EXIT HARDWARE OPTIONS:
F-25-C & (F)25-V SERIES - OPTIONS AE,
DM, LM, KOR, MEL, EA, FSA, FSE, CD, RX, LD
TRIMS: ALL APPLICABLE TRIMS AVAILABLE.

NOTE: ELECTRIFIED AND FIRE RATED OPTIONS OF
APPROVED HARDWARE ARE ACCEPTABLE.
INSTALLATION AND APPLICATION IS UNDER SEPARATE
APPROVAL AND IS REVIEWED BY THE CORRESPONDING
AUTHORITY

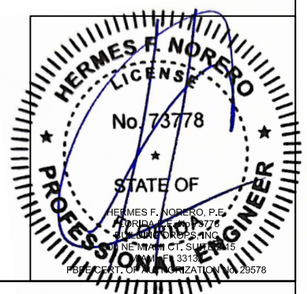

BEND RADIUS

THIRD ANGLE PROJECTION

DRAWN YMF	DATE 05/20/07
CHECKED	
APPROVED	
ENG. APPVL JPD	11/15/07

ALLEGION-SCHLAGE LOCK COMPANY, LLC
11819 N. PENNSYLVANIA STREET
CARMEL, IN 46032

TITLE: HARDWARE FOR DOUBLE OUTSWING GLAZED COMMERCIAL STEEL DOORS

HARDWARE FOR GLASS DOUBLE DOORS.

SIZE	FLAT	DWG NO.	REV
		IRGD07C	Q

SCALE:	NTS	AUTOCAD	FL14482.4	SHEET 10 OF 11

REVISIONS			
LTR	DESCRIPTION	ENG	DATE
A	APPROVAL DWG	YMF	05/20/07
M	REVISED DWG	JPD	07/18/18
N	LOCK UPDATE	SM	11/27/19
O	LOCK UPDATE	ER	10/05/20
P	LOCK UPDATE	CA	05/19/22
Q	CODE UPDATE	DI	08/25/23
R	LOCK UPDATE	JA	10/14/24
S	MULLION UPDATE	DI	12/02/25

BUTT HINGE
4.5" X 4.5" STD. WT. MIN.
IVES 5BB1/3CB1
.134" MIN. THICKNESS
Fy MIN. = 36ksi

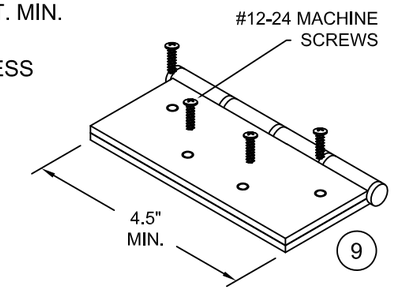

CONTINUOUS HINGE
IVES 112HD, 112XY 224HD & 224XY
ALUMINUM 6036-T6 MIN
.110" MIN. THICKNESS

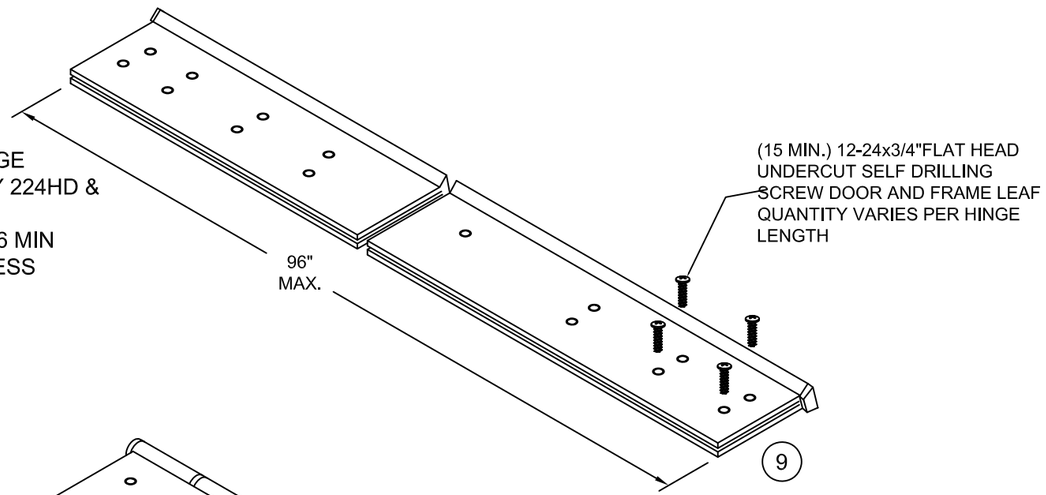

STEEL CONTINUOUS HINGE
IVES 600
.075 (14GA) MIN. THCKNESS
1012 COLD ROLLED STEEL
Fy MIN. 45ksi
STAINLESS STEEL CONTINUOUS HINGE
IVES 700, 700CS
.075" (14GA) MIN. THICKNESS
304 STAINLESS STEEL
Fy MIN. 31ksi

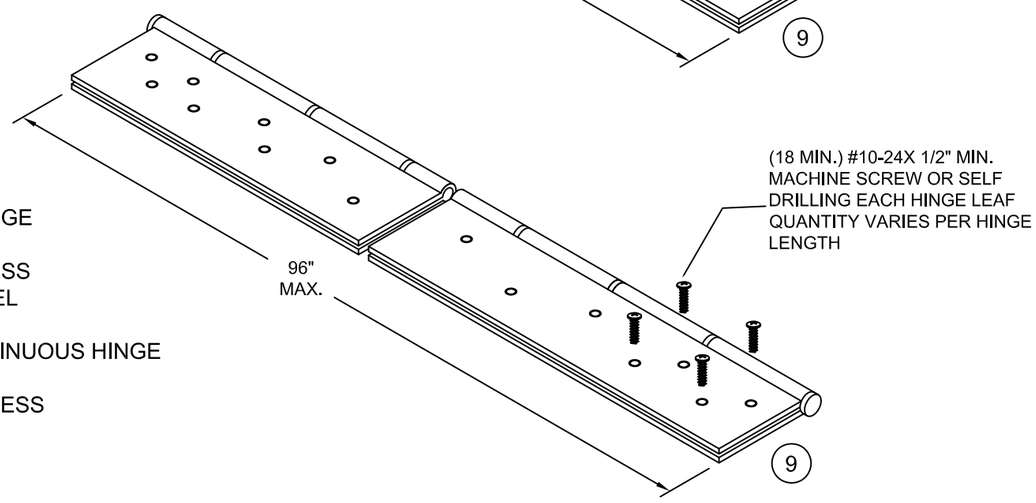

HINGE NOTES:
1. QUANTITY OF SCREWS VARIES PER HINGE LENGTH, MANUFACTURER AND MODEL NUMBER
2. SCREW SPACING VARIES PER HINGE LENGTH, MANUFACTURER AND MODEL NUMBER
3. INSTALL HINGES PER THE MANUFACTURERS INSTALLATION INSTRUCTIONS
4. BUTT AND CONTINUOUS HINGES MAY INCLUDE ELECTRICAL THROUGH-WIRE, POWER TRANSFER AND MONITORING.

HERMES F. NORERO
LICENSE
No. 73778
STATE OF
PROFESSIONAL ENGINEER
HERMES F. NORERO, P.E.,
FLORIDA P.E. NO. 73778,
FULL SPECTRUM, INC
[illegible] MIAMI ST - SUITE [illegible]
[illegible] 36132
FBPE CERT. OF AUTHORIZATION NO. 29578

BEND RADIUS	ALLEGION-SCHLAGE LOCK COMPANY, LLC 11819 N. PENNSYLVANIA STREET CARMEL, IN 46032		
THIRD ANGLE PROJECTION	TITLE: HARDWARE FOR DOUBLE OUTSWING GLAZED COMMERCIAL STEEL DOORS		
DRAWN JPD / DATE 02/03/14	HINGE OPTIONS		
CHECKED			
APPROVED	SIZE: FLAT	DWG NO. IRGD07C	REV Q
ENG. APPVL	SCALE: NTS	AUTOCAD FL14482.4	SHT 11 OF 11